CCDA | California Commission on Disability Access

GOVERNOR EDMUND G. BROWN JR.

CALIFORNIA COMMISSION ON DISABILITY ACCESS
721 Capitol Mall, Suite 250
Sacramento, California 95814
(916) 319-9974 office (916) 319-9976 fax
(800) 735-2929 TDD/TTY
www.ccda.ca.gov

MEMBERS of the COMMITTEE
Steve Dolim – Chair
Mike Brinkman
Stoyan Bumbalov
Bob Chase
Ida Clair
Kurt Cooknick

MEMBERS of the COMMITTEE
Dennis Corelis
Gary Layman
Mia Marvelli
Ewa O'Neal
Michael Paravagna

Commission Executive Staff
Stephan Castellanos – Executive Director

MEETING NOTICE AND AGENDA
CALIFORNIA COMMISSION ON DISABILITY ACCESS

CHECKLIST COMMITTEE

CCDA wants to provide the highest level of accessibility for all meetings. We encourage you to look at the detailed information starting on page 3.

July 28th, 2014

1:00 PM to 3:00 PM
(The end time is an estimate, the meeting may conclude earlier)

TELECONFERENCE # 1-866-770-5886
PARTICIPANT PASSCODE 19311577

Live Captioning
https://global.gotomeeting.com/join/244842589

Meeting Site Location

BUILDING STANDARDS COMMISSION
2525 NATOMAS PARK DR SUITE 120
SACRAMENTO, CA 95833

Notice is hereby given that the California Commission on Disability Access (CCDA) Checklist Committee will hear, discuss, deliberate and/or take an action upon the following items listed in this notice. The public is invited to attend and provide their input or comments.

ITEMS:

1) **Call to Order/ Roll Call**

2) **Comments from the Public on Issues not on this Agenda:** The Checklist Committee will receive comments from the public at this time on matters not on the agenda. Matters raised at this time may be briefly discussed by the Checklist Committee and/or placed on a subsequent agenda.

3) **Introductions**

4) **Purpose and Background**

5) **Task Definition as stated by Legislature**

6) **Time Frames for Deliverables**

7) **Vision of Deliverable**

a) Samples of different styles of checklists:
   i) by San Francisco Port
   ii) Richards Skaff/Restaurant Association
   iii) Restaurant Association Health and Food safety checklist
   iv) Codemasters
   v) Evan Terry Associates
   vi) Builder's Book Store products
   vii) DSA checklist
   viii)CALBO Samples from Layman
b) Discussions of successes and failures with above styles
c) Other Style ideas
d) Development of CCDA deliverable guiding definition

8) **Set up of sub-groups and focus on work efforts:**

a) Meeting schedules
b) Document development
c) Time Line development
d) Graphics
e) Product data entry

9) **Other inputs:**

10) **Future Agenda Items:** The Checklist Committee may discuss and set for action on future agendas, procedural and substantive items relating to the checklist project.

11) **Adjourn**

The Checklist Committee meeting is operating under the requirements of the Bagley-Keene Open Meeting Act set forth in Govt. Code Section § 11120-11132. The Act generally requires the Checklist Committee to publicly notice their meetings, prepare agendas, accept public testimony, and conduct their meeting in public unless specifically authorized by the Act to meet in closed session.

- **Meetings are subject to cancellation; agenda items are subject to removal or items may be taken out of order.**
- **The CCDA Checklist Committee meets under the authority of Government Code § 8299.**
- **The CCDA Checklist Committee may hold a closed session on pending or proposed litigation involving the Commission [Govt. Code § 11126(e)] and personnel matters and performance review relating to the Commission [Govt. Code § 11126(a)].**
- **The meeting facilities and restrooms are accessible to individuals with disabilities.**
- **Each CCDA Committee meeting will provide a teleconference line, large print agendas, and captioning.**
- **Requests for accommodations for individuals with disabilities (sign-language interpreter, assistive listening device, Braille, or any other accommodation needed by an individual) should be made to the Commission office no later than 10 (ten) working days prior to the day of the meeting.**
- **Technical difficulties with equipment experienced prior to or during the meeting preventing or inhibiting accessibility accommodation is not cause for not holding or for terminating the scheduled meeting.**
- **If Para transit services are needed, they may be contacted at (916) 429-2744, TDD (916) 429-2568 in Sacramento. Sacramento Regional Transit (www.sacrt.com) has public transit available the day of the meeting. For alternate routes contact Sacramento Regional Transit at (916) 321-BUSS (2877); for hearing impaired (916) 483-HEAR (4327).**
- **For Los Angeles Public Transit (www.metro.net) or (323) 466-3876 for bus and rail transit information. Riders with hearing or speech impairments use the California Relay Service – dial 711, and then the number you need. For Para transit services (www.asila.org) or if you ARE a certified access services rider within Southern California and would like to make a reservation call: 1-800-883-1295, TDD 1-800-826-7280. If you ARE NOT a certified access services rider, contact customer service at 1-800-827-0829, TDD 1-800-827-1359.**
- **For the latest information on meeting status, check the California Commission on Disability Access Web Site: http://www.ccda.ca.gov/**
- **Questions regarding this notice and agenda may be directed to Steve Funderburk, Office Administrator at (916) 319-9974 or at 721 Capitol Mall, Room 250, Sacramento, California 95814.**

5) Task Definition as stated by Legislature

SB 1608

8299.06.
The commission, as soon as practicable, but in no event later than July 1, 2010, shall develop, in consultation with the staff of the California Building Standards Commission, a master checklist for disability access compliance that may be used by building inspectors.

7) Vision of Deliverable

a) Samples of different styles of checklists:

i) by San Francisco Port

DISABILITY ACCESS CODE

QUICK SHEETS

DEVELOPED AND PREPARED BY
THE
SAN FRANCISCO DEPARTMENT OF PUBLIC WORKS
OFFICE OF THE
DISABILITY ACCESS COORDINATOR
30 VAN NESS AVENUE, FIFTH FLOOR
SAN FRANCISCO, CA 94102

VOICE: (415) 558-4524
TTY/TDD: (415) 558-4088
FAX: (415) 558-4090
e-mail: richardskaff@amer.net

Visit the Disability Access Coordinator's Web page: http://www.sfdpw.com/dacl

Information in this document is subject to change without notice. No part of this document may be reproduced or transmitted in any form or by any means, electronic or mechanical, for any purpose, without the express written permission of the San Francisco, California, Department of Public Works, Disability Access Coordinator.
©1998 San Francisco, California, Department of Public Works, Disability Access Coordinator. All rights reserved.

DISABILITY ACCESS CODE
QUICK SHEETS

GENERAL NOTES:

The diagrams in this document graphically illustrate many of the requirements of California Code of Regulations Title 24 and ADAAG (Americans with Disabilities Act Accessibility Guidelines) and is intended to be used as an aid for building design and construction. The Department of Public Works (DPW) assumes no liability in their use or misuse. This document attempts to integrate the most restrictive standards of the above named codes and shall be usedonly as a guide in conjunction with the above standards. Since this document is not prepared by any of the agencies responsible for the standards listed above, this document should only be considered an interpretation of these standards.

All minima, maxima, and exact dimensions are to be exact within the limits of modern measurement unless otherwise specified in Title 24 and ADAAG. All dimensions are "finish-to-finish" dimensions. For example, specifications for a toilet centered at 18 inches from the side wall means that the centerline is 18 inches from the finished surface of drywall or tile.

The San Francisco Department of Public Works,
Office of the Disability Access Coordinator
wishes to aknowledge the following people for their assistance in the completion of this project:

Peter Margen and Jason Hagin, Margen and Associates,
Jim Whipple and Neil Friedman, San Francisco Department of Building Inspection,
Kevin Jensen, Port of San Francisco,
Michael Mankin, AIA -Manager, Access Compliance Division, Division of the State Architect
and the Department of Public Works, Bureau of Architecture

LEGEND

AFF	= ABOVE FINISH FLOOR
AFG	= ABOVE FINSH GRADE
TYP.	= TYPICAL
>	= GREATER THAN
<	= LESS THAN
℄	= CENTER LINE
O.C.	= ON CENTER
LBF	= POUNDS FORCE
/W	= WITH

Information in this document is subject to change without notice. No part of this document may be reproduced or transmitted in any form or by any means, electronic or mechanical, for any purpose, without the express written permission of the San Francisco, California, Department of Public Works, Disability Access Coordinator.
© 1998 San Francisco, California, Department of Public Works, Disability Access Coordinator. All rights reserved.

■ SITE ACCESS AND PARKING

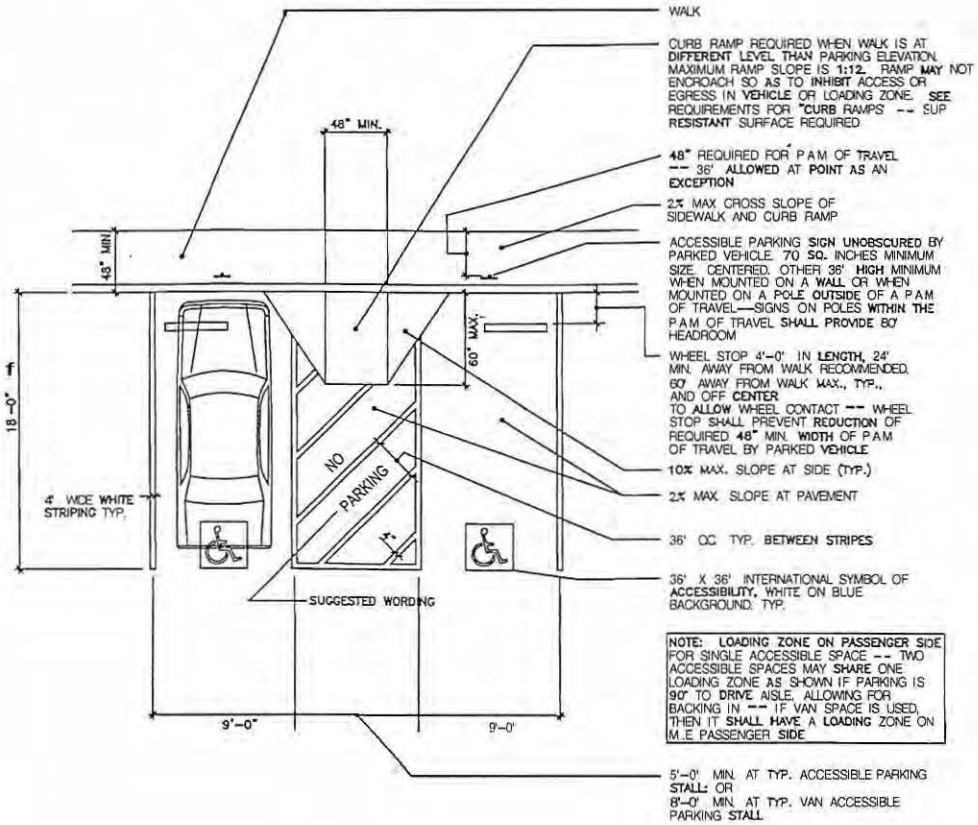

ACCESSIBLE PARKING
[SEC. 1129B.4]
[FIGS. 11B, 18A, 18B, 18C]

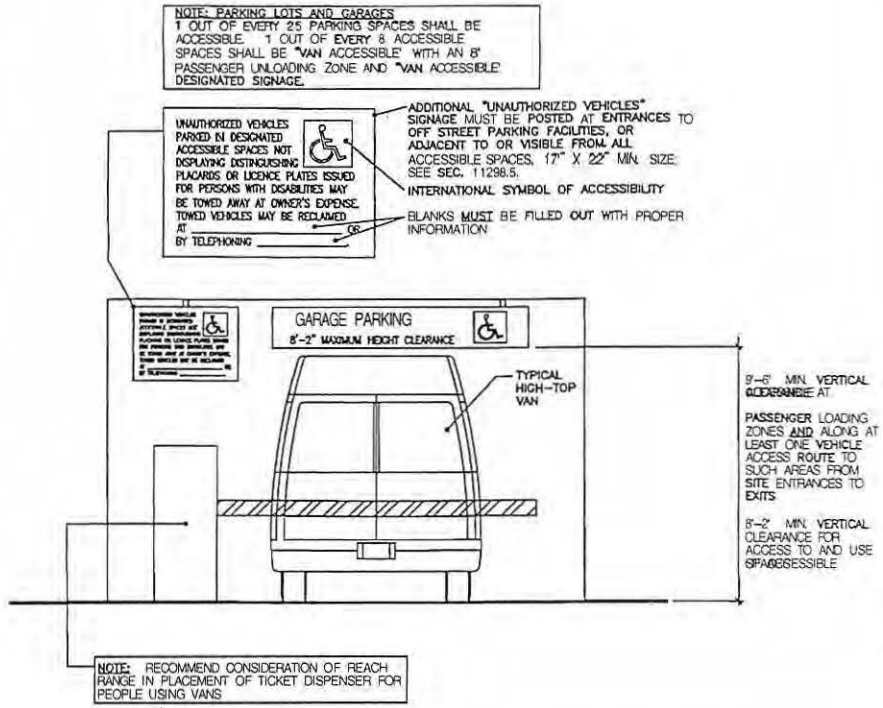

VERTICAL CLEARANCE AT PARKING GARAGE/PASSENGER LOADING ZONE
[SEC. 1129B; 1131B.2.2, AND FIG. 11B-24]

Information in this document is subject to change without notice. No part of this document may be reproduced or transmitted in any form or by any means, electronic or mechanical, for any purpose, without the express written permission of the San Francisco, California, Department of Public Works, Disability Access Coordinator.
© 1998 San Francisco, California, Department of Public Works, Disability Access Coordinator. All rights reserved.

PARKING AND PASSENGER LOADING ZONES

[SEC. 1131B]

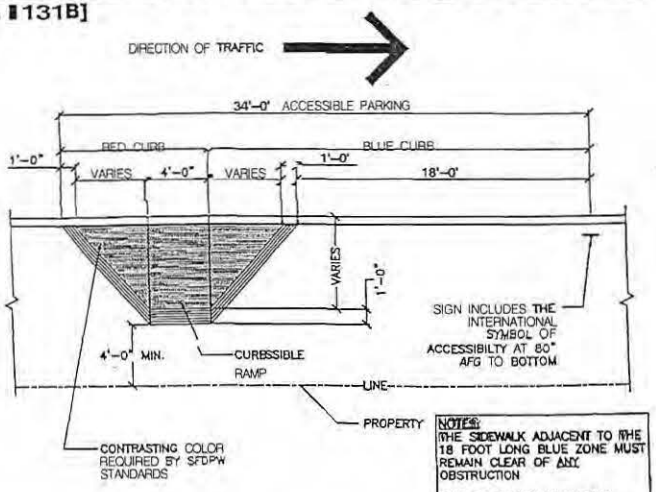

NOTES:
THE SIDEWALK ADJACENT TO THE 18 FOOT LONG BLUE ZONE MUST REMAIN CLEAR OF ANY OBSTRUCTION

REFER TO DPW CURB RAMP STANDARD PLAN NUMBER 62.171 OR 62.172 (FED. FUNDED)

MID-BLOCK BLUE ZONE

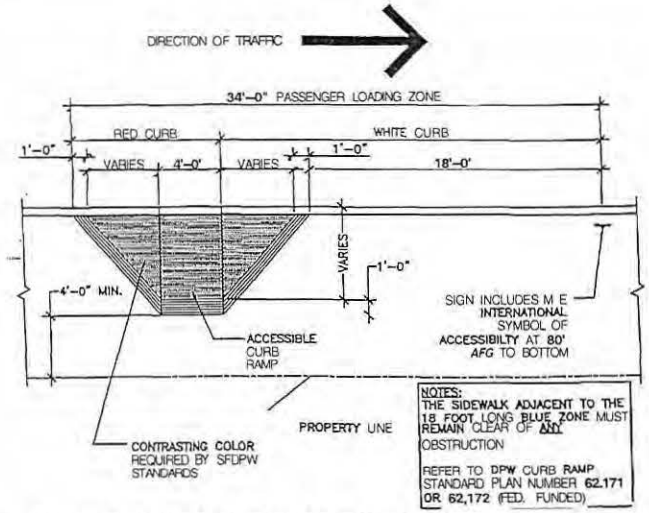

NOTES:
THE SIDEWALK ADJACENT TO THE 18 FOOT LONG BLUE ZONE MUST REMAIN CLEAR OF ANY OBSTRUCTION

REFER TO DPW CURB RAMP STANDARD PLAN NUMBER 62.171 OR 62.172 (FED. FUNDED)

MID BLOCK PASSENGER LOADING ZONE

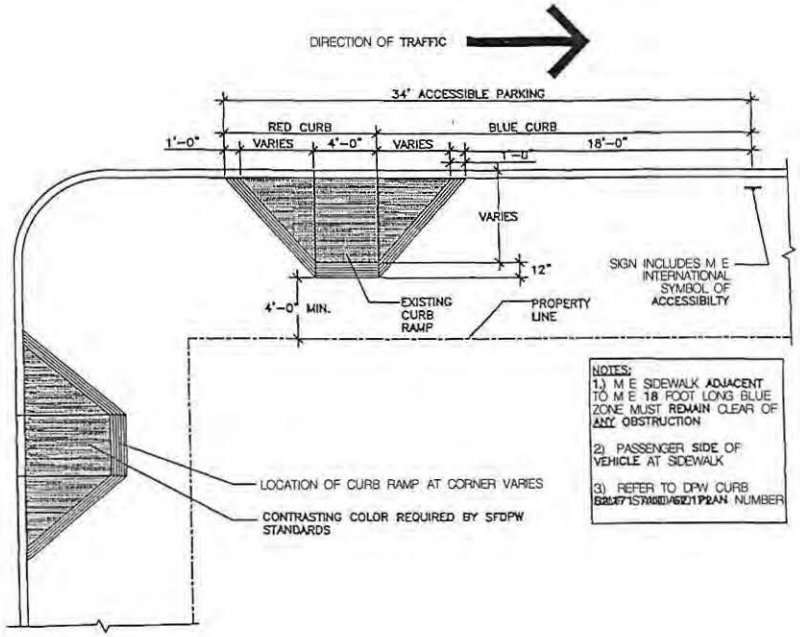

NOTES:
1.) M E SIDEWALK ADJACENT TO M E 18 FOOT LONG BLUE ZONE MUST REMAIN CLEAR OF ANY OBSTRUCTION

2) PASSENGER SIDE OF VEHICLE AT SIDEWALK

3) REFER TO DPW CURB RAMP STANDARD PLAN NUMBER 62.171 OR 62.172

END OF BLOCK BLUE ZONE PARKING SPACE

Information in this document is subject to change without notice. No part of this document may be reproduced or transmitted in any form or by any means, electronic or mechanical, for any purpose, without the express written permission of the San Francisco, California, Department of Public Works, Disability Access Coordinator.
© 1998 San Francisco, California, Department of Public Works, Disability Access Coordinator. All rights reserved.

■ CURB RAMPS
[SEC. 1127B.5]

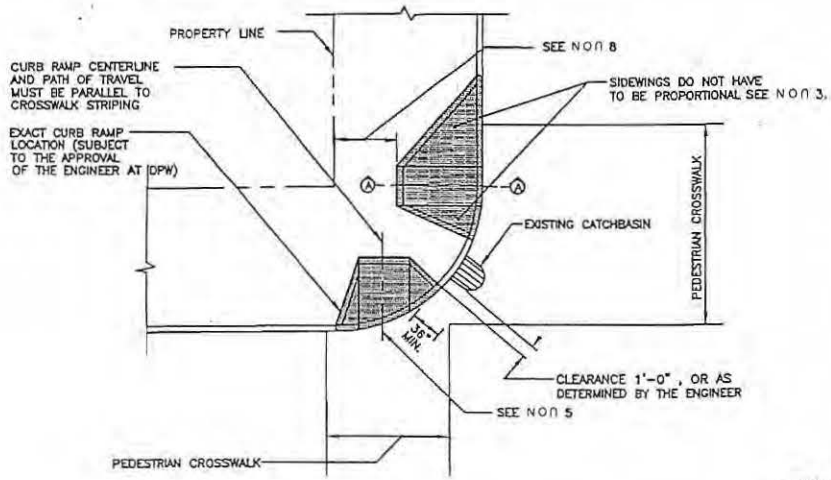

STANDARD CURB RAMP PLAN

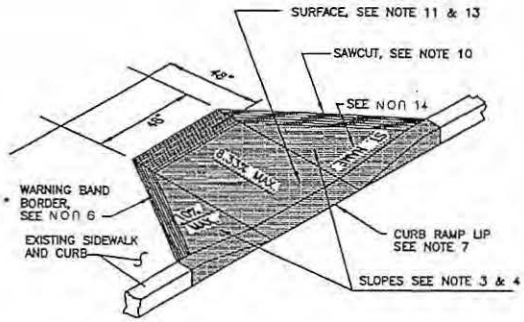

ISOMETRIC VIEW

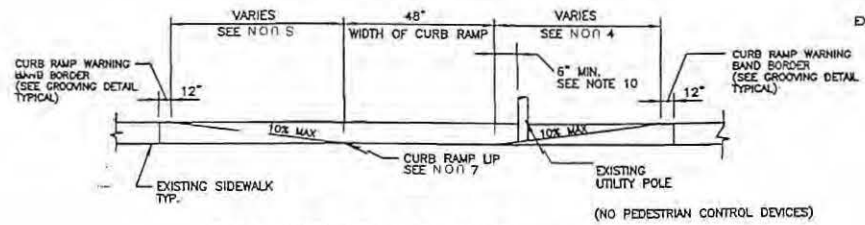

FRONT VIEW (CURB RAMP LIP)

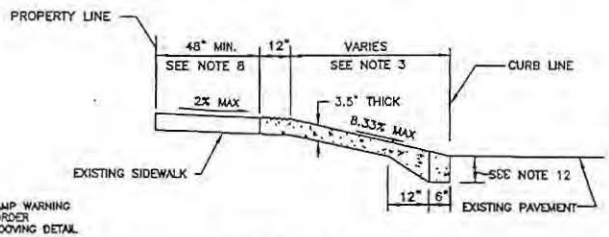

SECTION A-A

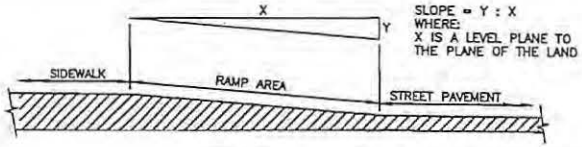

MEASUREMENT OF CURB RAMP SLOPES

CURB HEIGHT (inches)	RAMP DEPTH (feet)	WING LENGTH (inches)
3.0	4.0	42.0
3.5	4.5	47.0
4.0	5.0	52.0
4.5	5.5	57.0
5.0	6.0	62.0
5.5	6.5	67.0
6.0	7.0	72.0
6.5	7.5	77.0
7.0	8.0	82.0
7.5	8.5	87.0

DIMENSIONS INCLUDE 12" FOR THE WARNING BAND

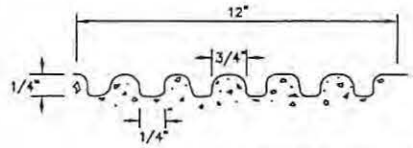

GROOVING DETAIL FOR WARNING BAND

CONSTRUCTION DETAIL NOTES:

1. A "CURB RAMP" IS DEFINED AS THE ENTIRE CONCRETE SURFACE AREA WHICH INCLUDES THE CENTER RAMP PORTION AND THE SIDEWINGS. THE "RAMP" IS DEFINED AS THE 4-FOOT WIDE CENTER PORTION AND SHALL LIE IN A SINGLE MAXIMUM SLOPED PLANE OF 8.33% (1:12) WITH A MINIMUM OF SURFACE WARPING AND CROSS SLOPE.
2. DOCUMENTATION OF AN UNREASONABLE HARDSHIP MUST BE PROVIDED TO THE DEPARTMENT OF PUBLIC WORKS PROJECT ENGINEER AND MAYOR'S DISABILITY COUNCIL. dESIGN EXCEPTIONS WILL BE APPROVED ON A CASE BY CASE BASIS WHEN STANDARD CURB RAMPS CANNOT BE BUILT. SEE DRAWING NO. 62, 172 FOR EXCEPTIONS TO THE STANDARD CURB RAMPS
3. A MAXIMUM SLOPE OF 8.33% (1:12) IS REQUIRED FOR THE RAMP AREA AND 10% (1:10) FOR BOTH SIDEWINGS. THE CURB HEIGHT DICTATES THE CURB RAMP DIMENSIONS BECAUSE OF THE SLOPE REQUIREMENTS. IF THE CURB RAMP IS LOCATED ON A CURVE, THE SIDEWINGS OF THE CURB RAMP DO NOT NEED TO BE PROPORTIONALLY EQUAL.
4. THE SLOPES OF THE CURB RAMP MAY BE LESS STEEP BUT IF THE RAMP SLOPE IS LESS THAN 6.66% (1:15) TRUNCATED DOMES WILL BE REQUIRED ON ALL CURB RAMP SURFACES (SEE DRAWING DETAILS FILE #62,172)
5. THE CURB RAMP SHALL BE CONSTRUCTED WITH THE CENTERLINE AND GUIDELINES OF THE RAMP PARALLEL TO THE CROSSWALK. EXACT LOCATIONS SHALL BE AS SHOWN ON STANDARD PLANS OR AS DIRECTED BY THE ENGINEER.
6. THE CURB RAMP SHALL BE BOUNDED BY A 12-INCH WARNING BAND BORDER WITH A 1/4-INCH WIDE BY 1/4-INCH DEEP GROOVES SCORED 3/4-INCH APART EXCEPT THE CURB SECTION.
7. THE LOWER END OF THE 4-FOOT WIDTH OF THE RAMP SHALL HAVE A 1/2-INCH UP BEVELED TO 45°. *IF THE RAMP IS CONSTRUCTED USING FEDERAL FUNDS, THE BOTTOM SHALL BE FLUSH AND FREE OF ABRUPT CHANGES BETWEEN THE BOTTOM OF THE RAMP AND THE STREET PAVEMENT SURFACE FOR THE FULL 48-INCH WIDTH OF THE RAMP.*
8. A (2% MAX. SLOPE) LEVEL LANDING 4 FEET DEEP SHALL BE PROVIDED AT THE UPPER END OF EACH CURB RAMP AND OVER ITS FULL WIDTH TO PERMIT SAFE EGRESS FROM THE RAMP SURFACE.
9. EXISTING VERTICAL OBSTRUCTIONS, UTILITY POLES OR STREET FURNITURE MAY BE INCORPORATED INTO THE SIDEWINGS IF NECESSARY BUT SHALL BE A MINIMUM OF 6 INCHES AWAY FROM THE CENTER RAMP PORTION. EXISTING UTILITY BOXES AND COVERS SHALL BE ADJUSTED TO CONFORM FLUSH WITH THE CURB RAMP SURFACE. PEDESTRIAN CROSSWALK CONTROL BUTTON POLE MAY NOT BE PLACED IN SIDEWINGS AT ANY TIME. NO NEW UTILITY BOXES OR VERTICAL OBSTRUCTIONS MAY BE LOCATED IN THE CURB RAMP.
10. THE SIDEWALK SHALL BE SAWCUT AT THE LIMIT OF THE CURB RAMP BORDERS, INCLUDING THE WARNING BAND AREA PRIOR TO THE REMOVAL OF THE SIDEWALK.
11. THE SURFACE OF THE CURB RAMP SHALL BE STABLE, FIRM AND SLIP RESISTANT. THE CURB RAMP SHALL BE BROOM FINISHED TRANSVERSE TO THE AXIS OF THE RAMP. THE FINISH SHALL BE SLIGHTLY ROUGHER THAN THE FINISH ON THE ADJACENT SIDEWALK SURFACE AND SHALL MEET A SLIP RESISTANCE COEFFICIENT OF 0.74 FOR CONCRETE SURFACES.
12. THE DEPTH OF THE CURB RAMP WHERE IT MEETS THE PAVEMENT SHALL BE EQUAL TO THE DEPTH OF THE EXISTING PAVEMENT STRUCTURAL SECTION OR 6 INCHES, WHICHEVER IS GREATER (SEE SECTION A-A)
13. ALL CURB RAMP SURFACES SHALL CONTRAST VISUALLY WITH ADJACENT SIDEWALK SURFACES. THE AMERICANS WITH DISABILITIES ACT (ADA) REQUIRES A 70% COLOR CONTRAST EITHER DARK ON LIGHT OR LIGHT ON DARK. CURB RAMP AND SIDEWALK SHALL BE TWO SEPARATE POURS. FOR REGULAR CONCRETE PROVIDE THREE (3.00) POUNDS OF HI-CARBON BLACK WITH A DISPERSING AGENT PER CUBIC YARD OF CONCRETE. FOR DARK SIDEWALK USE REGULAR CONCRETE WITH NO DARKENING AGENT. THE CARBON BLACK SHALL BE EXTRA HIGH STRENGTH, NON-FLOATING, DISPERSIBLE, NON-GLARE, AND UNAFFECTED BY SUNLIGHT. IT SHALL BE COMPOSED OF EXTREMELY FINE SUB-MICRON PARTICLE SIZE AND *MUST BE AN INTEGRAL PART OF THE CONCRETE MIX*
14. THE STREET NAME SHALL BE STAMPED IN BOLD UPPERCASE LETTERS 4-INCH HIGH AND 1/2-INCH DEEP ON THE SIDEWING PORTION OF THE CURB RAMP OR ON AN ADJACENT SIDEWALK FLAG AS DIRECTED BY THE ENGINEER.
15. THE SLOPE OF THE ADJOINING ROAD SURFACES AND GUTTERS SHALL NOT EXCEED 5%

Information in this document is subject to change without notice. No part of this document may be reproduced or transmitted in any form or by any means, electronic or mechanical, for any purpose, without the express written permission of the San Francisco, California, Department of Public Works, Disability Access Coordinator.
©1996 San Francisco, California, Department of Public Works, Disability Access Coordinator. All rights reserved.

RAMPS, HANDRAILS AND STAIRS

[SEC. 1007, 1006.9A, 1006]
[FIGS. 11B - 27, 10 - 3]

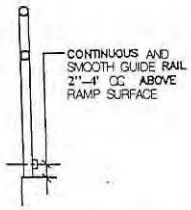

ACCEPTABLE

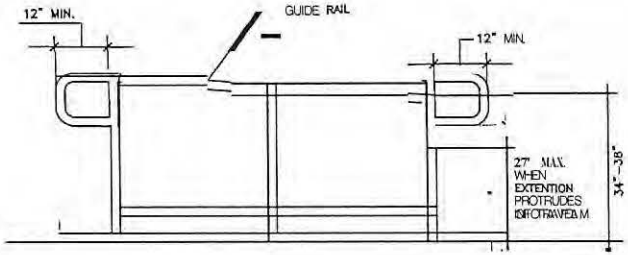

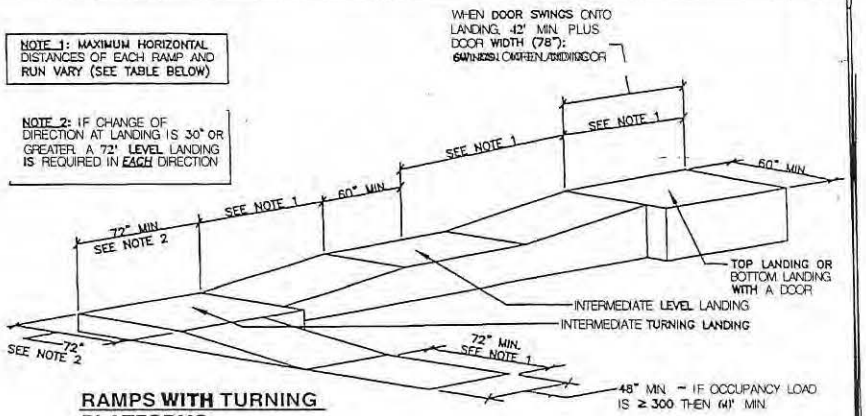

RAMPS WITH TURNING PLATFORMS

EXAMPLES OF RAMP DIMENSIONS

SLOPE	MAXIMUM VERTICAL RISE (INCHES)	MAXIMUM HORIZONTAL PLAN DISTANCE BETWEEN LANDINGS (FEET)
1:12	30	30
1:16	30	40
1:20	30	50
1:15	30	37.5

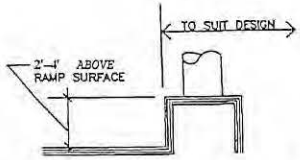

ACCEPTABLE

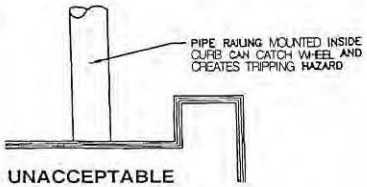

UNACCEPTABLE

WHEEL GUIDE DETAILS
[SEC. 1007.10]

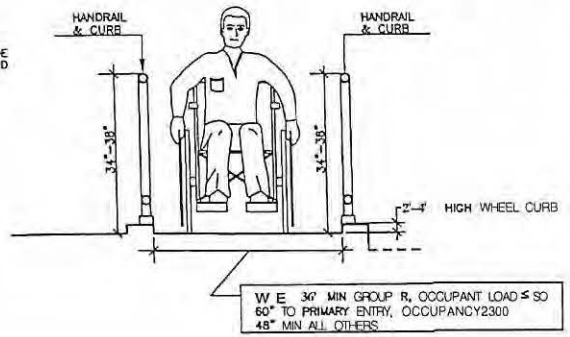

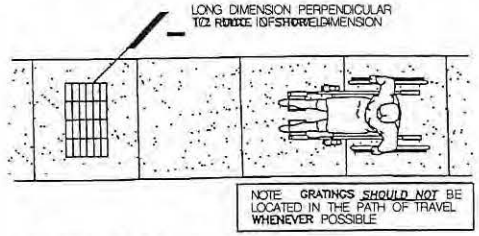

GRATINGS AT SIDEWALKS
[SEC. 1023.21]

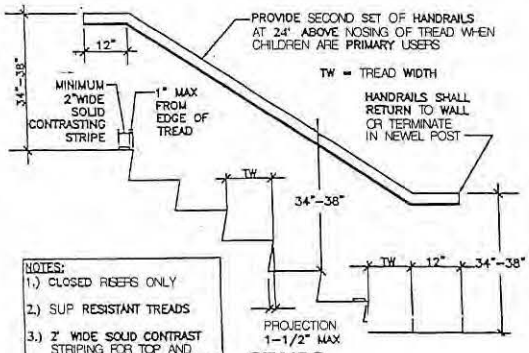

NOTES:
1.) CLOSED RISERS ONLY
2.) SLIP RESISTANT TREADS
3.) 2" WIDE SOLID CONTRAST STRIPING FOR TOP AND BOTTOM TREAD ON INTERIOR STAIRS, ALL TREADS ON EXTERIOR STAIRS

STAIRS
[SEC. 1006, 1114B.1.1]
[FIG. 11B - 35]

NOTE: THE UNDERSIDES OF NOSINGS SHALL NOT BE ABRUPT. THE RADIUS OF CURVATURE AT THE LEADING EDGE OF THE TREAD SHALL BE NO GREATER THAN 1/2 INCH. RISERS SHALL BE SLOPED OR THE UNDERSIDE OF THE NOSING SHALL HAVE AN ANGLE NO LESS THAN 60 DEGREES FROM THE HORIZONTAL. NOSINGS SHALL PROJECT NO MORE THAN 1 1/2 INCHES. WATER SHALL NOT ACCUMULATE ON THE TREAD SURFACE. TREAD SURFACE TO BE SLIP RESISTANT.

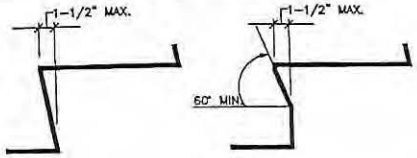

STAIR NOSING
[SEC 1006.1 6.2.2]
[FIG. 10-8, 11B - 35]

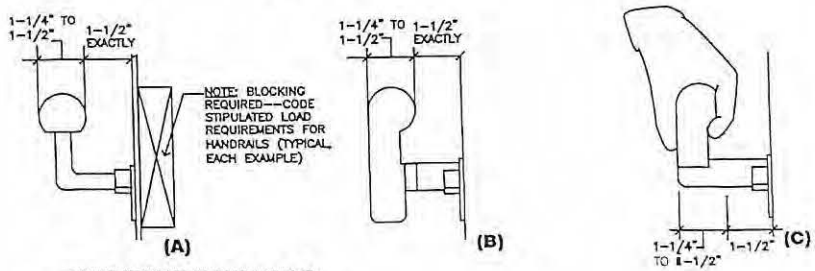

RAMP/STAIR HANDRAILS

Information in this document is subject to change without notice. No part of this document may be reproduced or transmitted in any form or by any means, electronic or mechanical, for any purpose, without the express written permission of the San Francisco, California, Department of Public Works, Disability Access Coordinator.
© 1998 San Francisco, California, Department of Public Works, Disability Access Coordinator. All rights reserved.

■ DOOR OPENINGS, VESTIBULES AND CORRIDORS

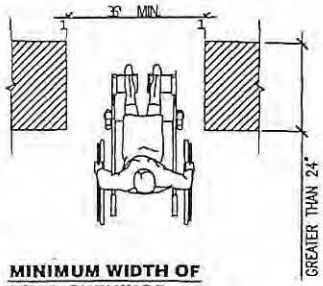

MINIMUM WIDTH OF DEEP OPENINGS GREATER THAN 24"

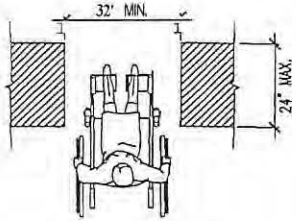

MINIMUM WIDTH OF 24" DEEP OPENINGS
[FIGS. **10-5D, 11B-33**]

NOTE: DOORS MAY ALSO SWING OUTWARD AT BOTH ENDS. SUCH DOORS MUST HAVE 12" MINIMUM CLEARANCE TO THE PUSH/STRIKE IF THE DOOR IS EQUIPPED WITH BOTH LATCH AND CLOSER.

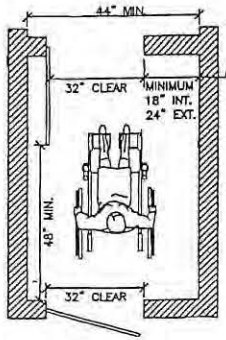

EXTERIOR (EXT.) MEANS SUBJECT TO EXTERIOR AIR PRESSURES, AS IN OPEN AIR STRUCTURES.

DOORS IN SERIES

VESTIBULES
[SEC. **1004.9.2.3A**]
[FIG. **10-5A, 10-5B, 11B-31**]

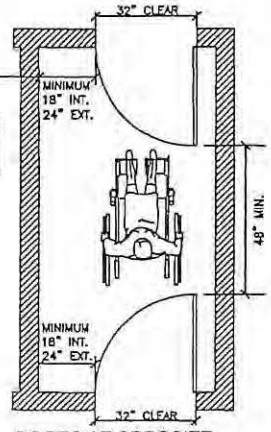

DOORS AT OPPOSITE WALLS OPENING INWARD
[**FIG. 10-5B,11B-31**]

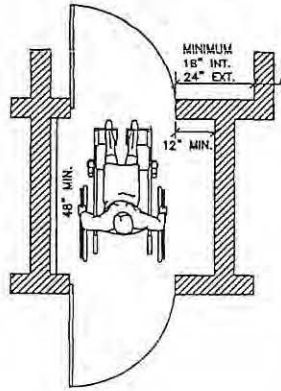

EXTERIOR (EXT.) MEANS SUBJECT TO EXTERIOR AIR PRESSURES, AS IN OPEN AIR STRUCTURES.

DOORS AT OPPOSITE WALLS OPENING OUTWARD
[**FIG. 10-5A, 11B-30**]

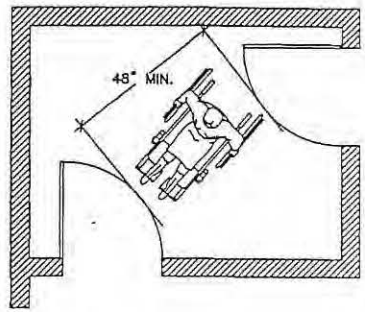

DOORS OPENING AT A RIGHT ANGLE
[FIG. **10-5B,11B-31**]

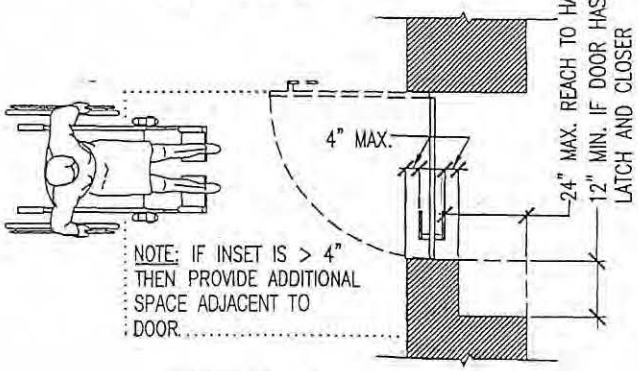

NOTE: IF INSET IS > 4" THEN PROVIDE ADDITIONAL SPACE ADJACENT TO DOOR.

DOORS INSET IN A DEEP OPENING

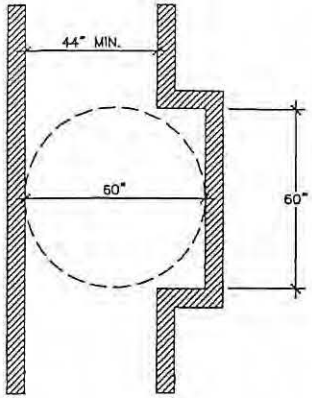

60" X 60" TURN AROUND
[**SEC. 1005.2.1A, 1005.2.2A, 1005.2.3A**] [FIG. **10-6, 11B-33**]

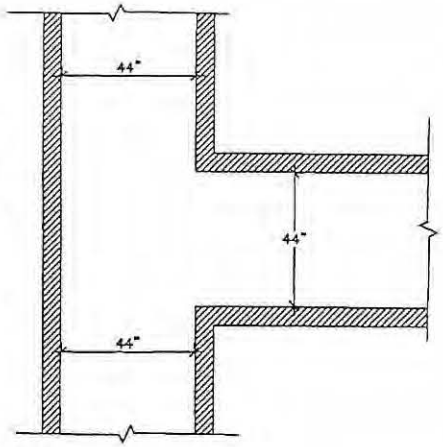

"T" INTERSECTION
[**SEC. 1005.2.1A, 1005.2.2A, 1005.2.3A**] [FIG. **10-6, 11B-33**]

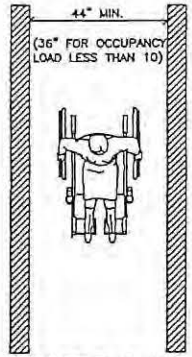

CORRIDOR UNDER 200 FEET
[SEC. **1005.2.1A**]

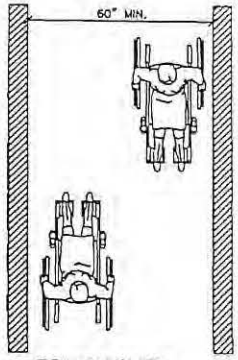

CORRIDOR OVER 200 FEET
[**SEC. 1005.2.2.2A**]

[SEE FIG. **10-6, 11B-12, 11B-34**]

Information in this document is subject to change without notice. No part of this document may be reproduced or transmitted in any form or by any means, electronic or mechanical, for any purpose, without the express written permission of the San Francisco, California, Department of Public Works, Disability Access Coordinator.
© 1998 San Francisco, California, Department of Public Works, Disability Access Coordinator. All rights reserved.

DOOR APPROACHES, DOOR CONSTRUCTION AND HARDWARE

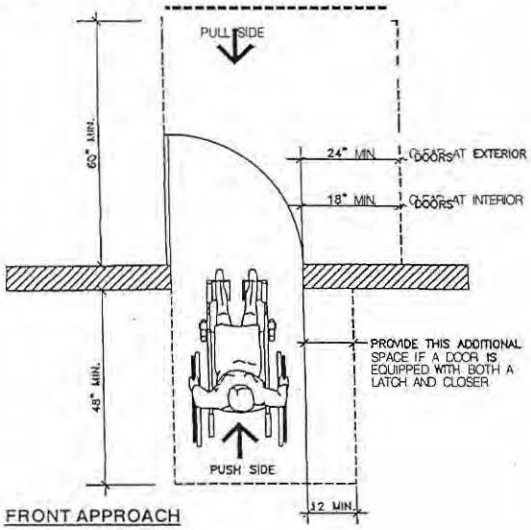

FRONT APPROACH

DOOR APPROACHES
[SEC. **1004.9.2.1.1A, 1004.9.2.2A**]
[FIG. 10-2, **11B-26**]

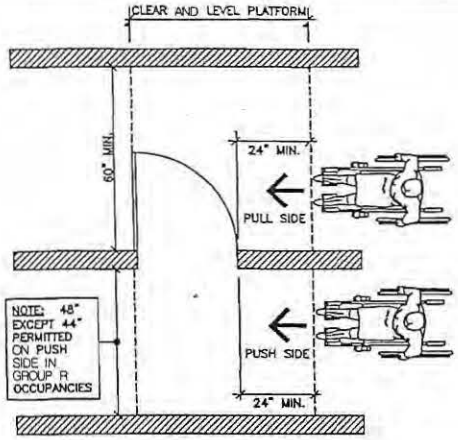

LATCH APPROACH

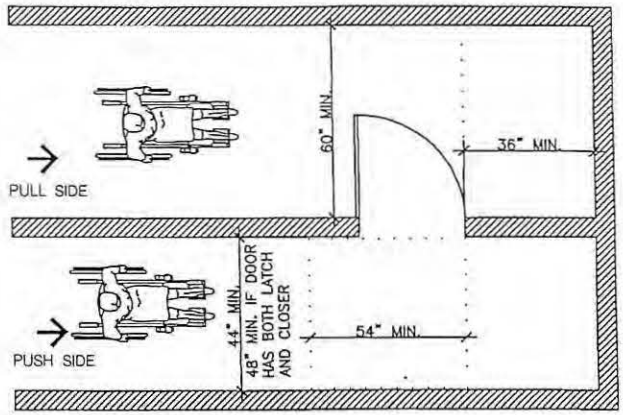

HINGE APPROACH

THRESHOLD: CHANGE IN LEVEL 1/4 TO 1/2 IN. PERMITTED WITH 1:2 BEVEL; GREATER CHANGE SHALL BE RAMPED 1:12

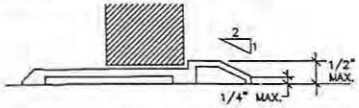

THRESHOLDS
[SEC. **1004.9.1 A**] [FIG. **10-5C, 11B-32**]

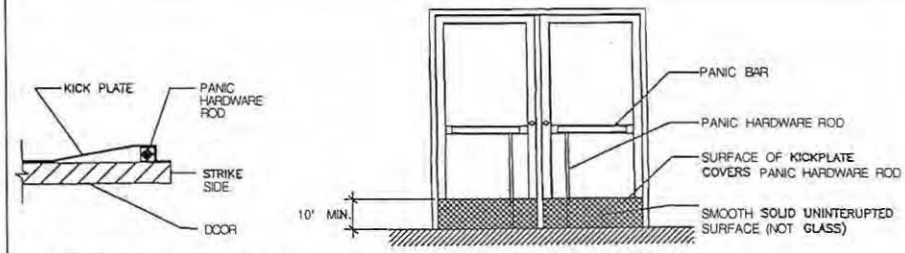

PLAN/SECTION DETAIL

ELEVATION

SUGGESTED RETROFIT OR ALTERNATE **KICK** PLATE AT DOORS **WITH** VERTICAL PANIC HARDWARE RODS

MAX. DOOR CLOSER PRESSURES

5.0 LBS.	INTERIOR
8.5 LBS.	EXTERIOR
15.0 LBS.	FIRE*

*(UP TO 15LBF. MAX. FORCE NECESSARY FOR DOOR TO CLOSE & LATCH)

M E SWEEP PERIOD AT THE CLOSER SHALL BE ADJUSTED SO THAT FROM AN OPEN POSITION OF 70 DEGREES THE DOOR m U TAKE AT LEAST 3 SECONDS TO MOVE TO A POINT 3' FROM THE LATCH MEASURED TO THE LEADING EDGE OF THE DOOR [ADAAG 4.13.10]

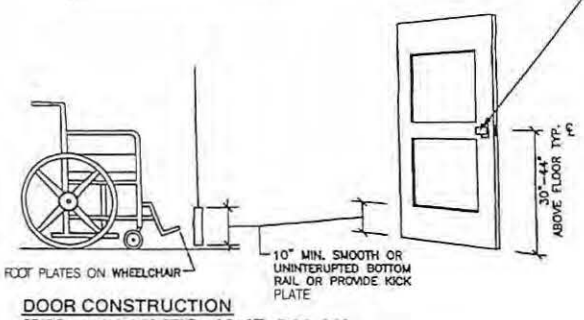

DOOR CONSTRUCTION
[SEC. **1004.15**] [FIG. **10-4B, 18-29**]

NOTE: HAND-ACTIVATED LATCHING AND LOCKING DOORS ALONG A PATH OF TRAVEL SHALL BE OPERABLE WITH A SINGLE EFFORT BY LEVER TYPE HARDWARE, PANIC BARS, PUSH-PULL ACTIVATING BARS OR OTHER HARDWARE DESIGNED TO PROVIDE PASSAGE WITHOUT REWIRING THE ABILITY TO GRASP THE DOOR HARDWARE.

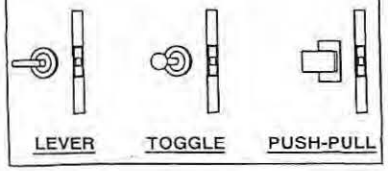

DOOR HARDWARE
[SEC. **1004.15**]

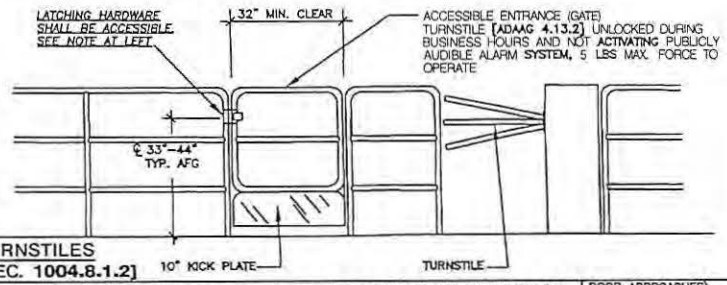

TURNSTILES
[SEC. **1004.8.1.2**]

Information in this document is subject to change without notice. No part of this document may be reproduced or transmitted in any form or by any means, electronic or mechanical, for any purpose, without the express written permission of the San Francisco, California, Department of Public Works, Disability Access Coordinator.
© 1998 San Francisco, California, Department of Public Works, Disability Access Coordinator. All rights reserved.

ELEVATORS
[SEC. 3003.4.1A, 3006B, 3004B.1.2]

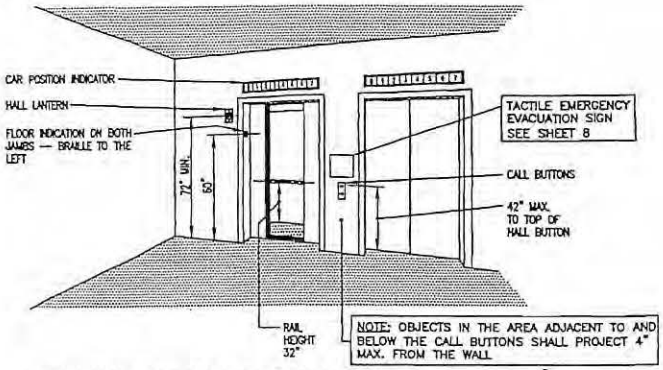

ELEVATOR LOBBY AND CAR RAIL HEIGHT
[FIG 30-B]

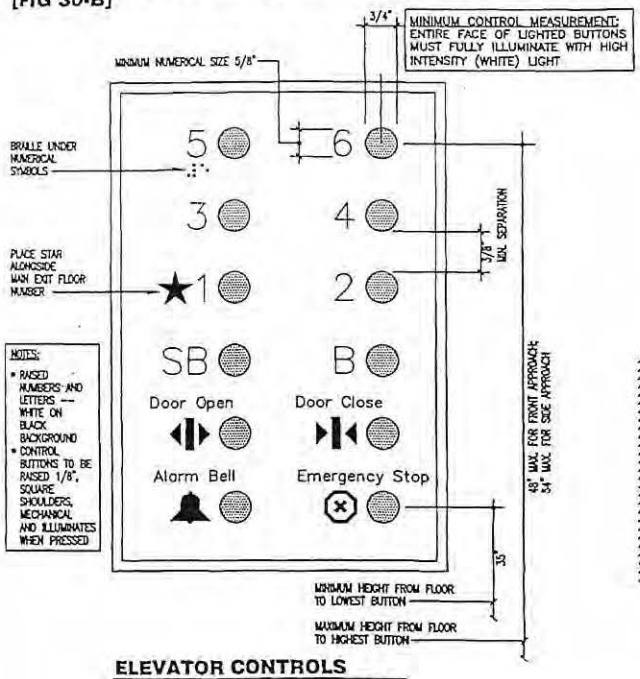

ELEVATOR CONTROLS
[SEC. 3003.4.8A] [FIG. 30-B]

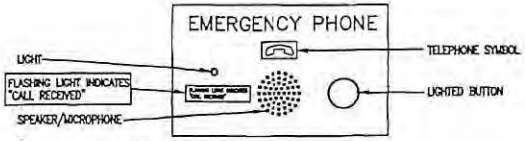

TWO-WAY INTERCOMMUNICATION DEVICE
[SEC. 3003.4.7A]

NOTES:
1). IF TWO-WAY INTERCOMMUNICATION DEVICE IS IN CLOSED COMPARTMENT THEN DOOR MUST HAVE LEVER OR LOOP HARDWARE PER 1118.6.4
2). EMERGENCY INTERCOMMUNICATIONS SHALL NOT REQUIRE VOICE COMMUNICATION
3). ELEVATOR MUST BE EQUIPPED WITH A DOOR REOPENING DEVICE THAT REOPENS DOOR WHEN OBSTRUCTED DURING CLOSING.
4). DOORS SHALL REMAIN FULLY OPEN WHEN ANSWERING A CALL FOR A MINIMUM OF 5 SECONDS.
5). MUST HAVE AN AUDIBLE AND VERBAL ANNOUNCEMENT OR SIGNAL THAT SOUNDS TO TELL THE PASSENGERS THE CAR IS STOPPING AT OR PASSING A FLOOR.
6). AUDIBLE SIGNAL:
1 BELL = UP
2 BELLS = DOWN

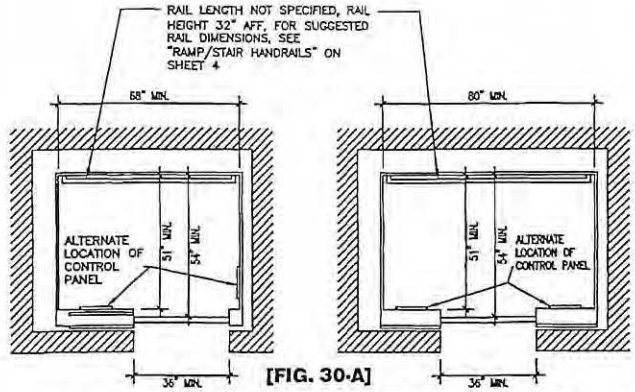

[FIG. 30-A]

SIDE OPENING DOOR

CENTER OPENING DOOR

• WHEELCHAIR LIFTS
[SEC. 3008.1]

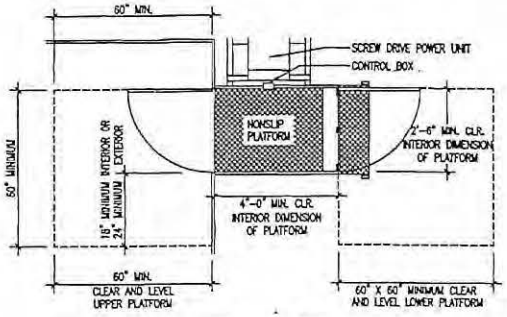

"STRAIGHT-THROUGH" PLATFORM LIFT PLAN

NOTES:
1). USE LIFT TO PROVIDE INTERIOR OR EXTERIOR ACCESS WHERE EXISTING SITE CONSTRAINTS OR OTHER CONSTRAINTS MAKE USE OF A RAMP OR ELEVATOR UNFEASIBLE.
2.) LIFT MUST BE SELF OPERABLE WITHOUT THE USE OF ASSISTANCE, KEYS OR OTHER SECURITY DEVICES.
3). CONTROLS: CONSTANT PRESSURE TYPE: PUSH-BAR OR EQUALLY ACCESSIBLE CONTROL.
4). TOP AND BOTTOM LANDINGS MUST HAVE A SOLID DOOR OR GATE 42" IN HEIGHT, LEVEL CLEAR SPACES OF 60" SQUARE MINIMUM. LIFT MUST BE OPERABLE ONLY WHEN DOORS OR GATES ARE PROPERLY CLOSED. SEE PAGES 5 AND 6 OF THIS DOCUMENT FOR STRIKE SIDE CLEARANCES AT DOORS.
5). "CALL-SEND" CONTROLS MUST BE AT EACH LANDING AND COMPLY WITH SECTION 3008.1.4.7.
6). IF A WRAP LANDING IS PROVIDED: 1:12 SLOPE MAXIMUM FOR RAMPS 15" LONG OR GRATER 2:12 SLOPE MAXIMUM FOR RAMPS LESS THAN 15" LONG
7). THERE ARE ADDITIONAL RESTRICTIONS ON THE USE OF LIFTS IN NEW CONSTRUCTION. REFER TO ADDAAG 4.1.3. EXCEPTION 4.
8). DAILY LOG REQUIRED, INDICATING THAT LIFT HAS BEEN CHECKED AND IS OPERATIONAL.
9). EVIDENNCE OF YEARLY MAINTENANCE CONTRACT REQUIRED

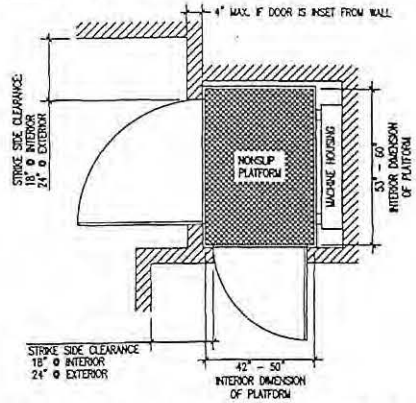

"90 DEGREE TURNING" PLATFORM LIFT PLAN (PROPOSED RESOLUTION GUIDELINE ONLY)

Information in this document is subject to change without notice. No part of this document may be reproduced or transmitted in any form or by any means, electronic or mechanical, for any purpose, without the express written permission of the San Francisco, California, Department of Public Works, Disability Access Coordinator.
©1998 San Francisco, California, Department of Public Works, Disability Access Coordinator. All rights reserved.

a EXAMPLE OF **CALIFORNIA** STATE FIRE MARSHALL TITLE -19 TACTILE **EMERGENCY EVACUATION** SIGN

FOR COMPLETE EVACUATION SIGN/HIGH RISE BULLETIN POLICY CONTACT M'E SAN FRANCISCO FIRE MARSHALL'S OFFICE AT 558-3300

NOTES:
1). ALL RAISED LETTERING AND SYMBOLS SHALL BE RAISED 0.0625'
2). ALL LETTERING SHALL BE 5/8" MIN. HEIGHT, UNLESS OTHERWISE NOTED
3). VARIOUS ELEMENTS OF MIS ILLUSTRATION ARE NOT TO SCALE

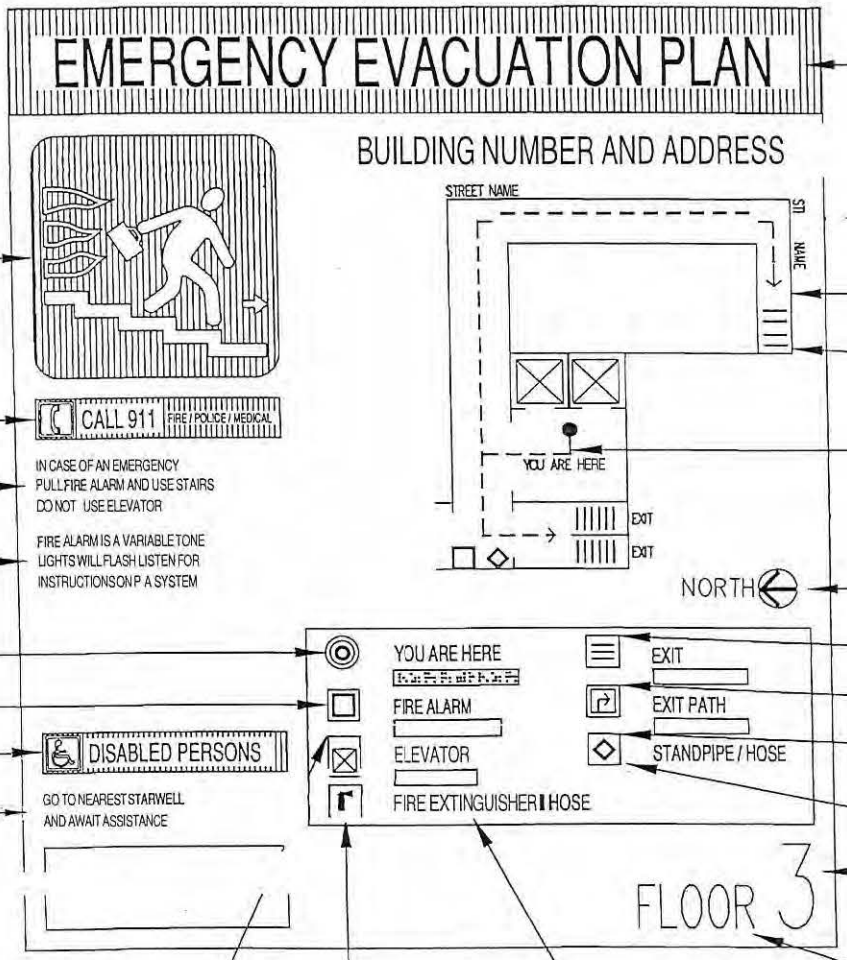

WSED SYMBOLS FLAME, PERSON AND STAIRS

EMERGENCY INFORMTION RAISED 5/8" WHITE LETTERING W/ RED BACKGROUND

RAISED 5/8" RED LETTERING

5/8" BLACK LETTERING RAISED LETTERING AND BRAILLE

RAISED ORANGE YOU ARE HERE SYMBOL

RAISED RED ALARM SYMBOL

DISABILITY INFORMTION RAISED 5/8" WHITE LETTERING W/ BLUE BACKGROUND

RAISED 5/8" BLUE LETTERING

BRAILLE FONT IN MIS AREA

RAISED BLACK ELEVATOR SYMBOL

RED FH EXTINGUISHER NO RAISED LETTERING OR BRAILLE

ALL LEGEND LETTERING SHALL BE WHITE W/ BUCK BACKGROUND

RAISED 5/8" WHITE W I N G W/ RED BACKGROUND

1/2" RAISED LETTERING OR BRAILLE

WE ALL TEXT ON EVACUATION 3/16' BLACK LETTERING NO RAISED LETTERING OR BRAILLE UNLESS OTHERWISE NOTED

RAISED BLACK LINES ON PAM

NOTE: ALL LINES ON EVACUATION PLAN RAISED .0625" UNLESS OTHERWISE NOTED

RAISED EXIT PAM BROKEN GREEN LINE

NORTH ARROW RAISED BLACK LETTERING

RAISED BLACK EXIT SYMBOL

RAISED GREEN EXIT PAM SYMBOL

RED STANDPIPE SYMBOL NO RAISED LETTERING OR BRAILLE

BACKGROUND OF ALL LEGEND SYMBOLS SHALL BE WHITE

RAISED 2" BLACK NUMBER

WSED BLACK LETTERING

Information in this document is subject to change without notice. No part of this document may be reproduced or transmitted in any form or by any means, electronic or mechanical, for any purpose, without the express written permission of the San Francisco, California, Department of Public Works, Disability Access Coordinator.
©1998 San Francisco, California, Department of Public Works, Disability Access Coordinator. All rights reserved.

TOILET FACILITIES
[SEC. 1115B]

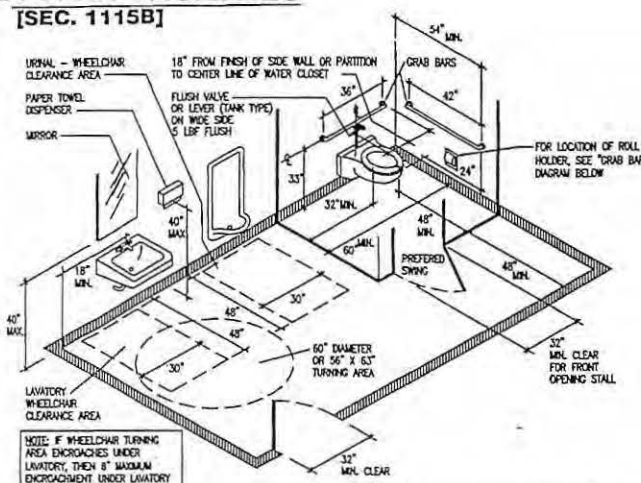

NOTE: IF WHEELCHAIR TURNING AREA ENCROACHES UNDER LAVATORY, THEN 8" MAXIMUM ENCROACHMENT UNDER LAVATORY UP TO 29" ABOVE THE FLOOR CLEAR IS ALLOWED.

NOTE: 40" MAX. FROM FINISH FLOOR AT OPERABLE PART FOR ONE OF EACH DESPENSING DEVICE AND TRACH RECEPTACLE.

NOTE: ALL ACCESSIBLE STALL DOORS SHALL BE SELF CLOSING AND HAVE HANDLES ON BOTH SIDES, AND LEVER/LATCH OR OPEN LOOP TYPE LOCKING HARDWARE (SEC. 1115B.7.1.4)

MULTIPLE ACCOMMODATION RESTROOMS
[SEC. **1115B.7.1**]

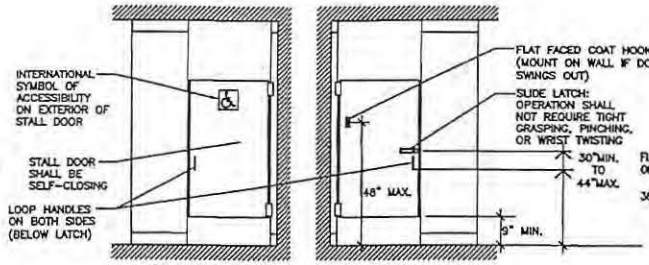

EXTERIOR ELEVATION **INTERIOR ELEVATION**

ACCESSIBLE STALL DOOR AND HARWARE

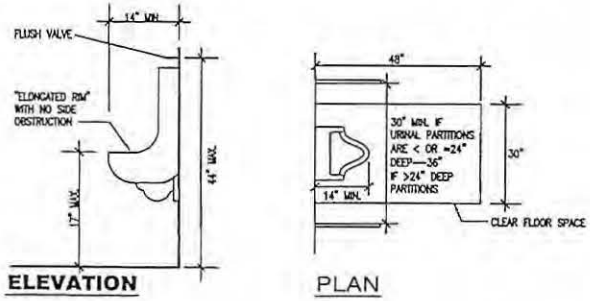

ELEVATION PLAN

URINALS
[SEC. **1115B.9.4**]
[PART 5 PLUMB. CODE SEC. **1503.0**]

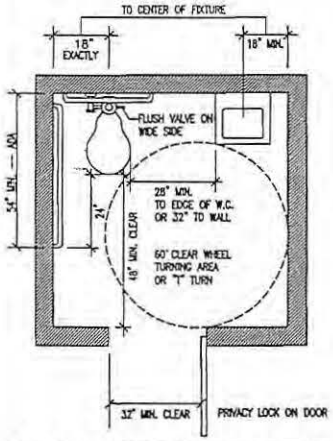

SINGLE ACCOMMODATION RESTROOMS
[SEC. 1115B.7.2] [FIG. 11B-1A]

NOTE: PLACEMENT OF FIXTURES SUCH AS TISSUE/COVER COMBO UNITS BEHIND GRAB BAR IS DISCOURAGED

ALSO SEE ADA FIG. 29(b) FOR SIDE GRAB BAR AND OVERALL STALL DIMENSION REQUIREMENTS FOR VARIOUS TYPES OF ACCESSIBLE RESTROOMS

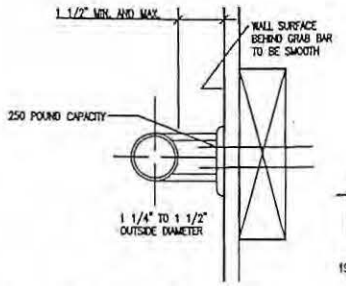

GRAB BARS
[SEC. 1115B.8]

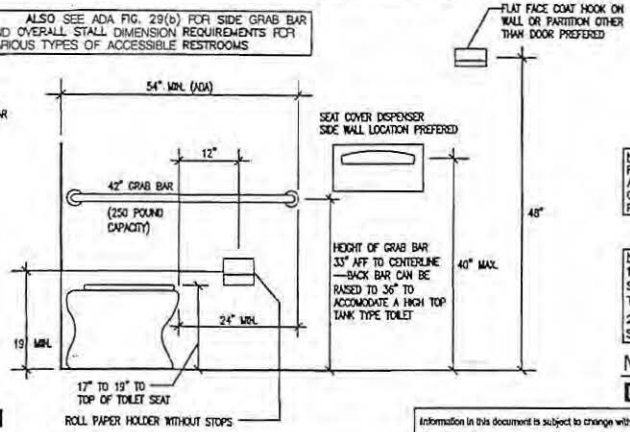

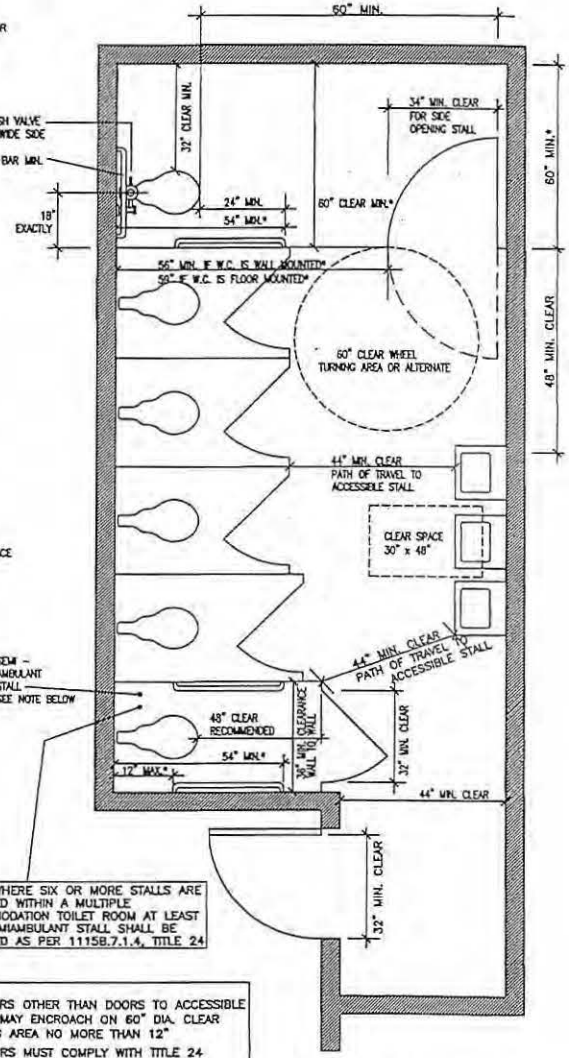

NOTE: WHERE SIX OR MORE STALLS ARE PROVIDED WITHIN A MULTIPLE ACCOMMODATION TOILET ROOM AT LEAST ONE SEMIAMBULANT STALL SHALL BE PROVIDED AS PER 1115B.7.1.4, TITLE 24

NOTES:
1). DOORS OTHER THAN DOORS TO ACCESSIBLE STALLS MAY ENCROACH ON 60" DIA. CLEAR TURNING AREA NO MORE THAN 12"
2). DOORS MUST COMPLY WITH TITLE 24 SECTION 1004, DOORS (SEE SHEET 6)

MULTIPLE ACCOMMODATION RESTROOMS
[SEC. 1115B.7.1] [FIG. **11B-1B**]

KEY: * = ADA REQ.

Information in this document is subject to change without notice. No part of this document may be reproduced or transmitted in any form or by any means, electronic or
© 1998 San Francisco, California, Department of Public Works, Disability Access Coordinator. All rights reserved.

□ LAVATORIES AND SHOWERS

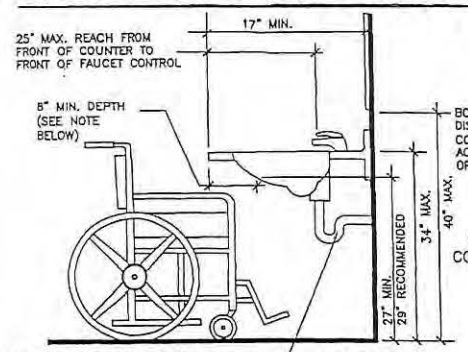

WALL-HUNG LAVATORY

NOTE: 29" MIN. AFF TO UNDERSIDE AT FRONT, 8" MIN. DEPTH AT 27" MIN. AFF (29" MIN. AFF RECOMMENDED) -- SINCE FIXTURES WHICH MEET THE RECOMMENDED REQUIREMENT ARE READILY AVAILABLE, THIS CLEARANCE WILL BE REGULATED FOR ALL PUBUC PROJECTS UNDER THE JURISDICTION OF THE CITY AND COUNTY OF SAN FRANCISCO.

LAVATORIES
[SEC. 1115B.9.1]
[PART 5 PLUMB. SEC. 1504.2]

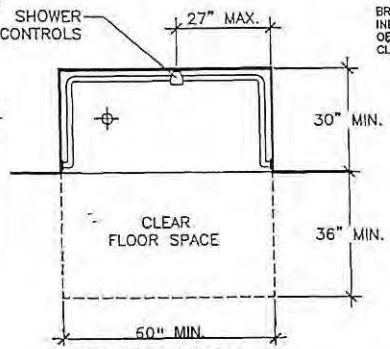

30" X 60" ROLL-IN SHOWER

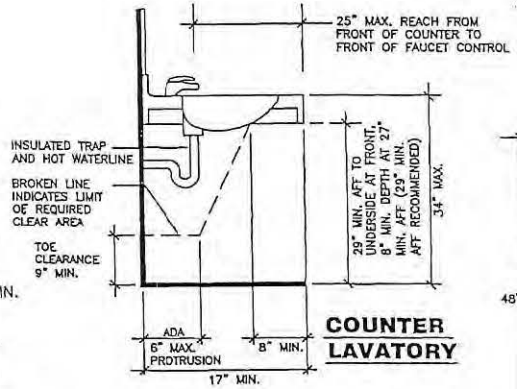

COUNTER LAVATORY

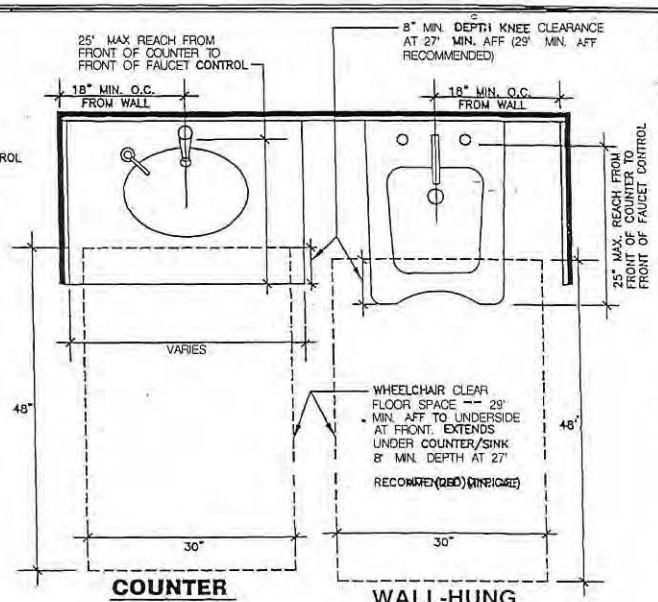

COUNTER LAVATORY **WALL-HUNG LAVATORY**

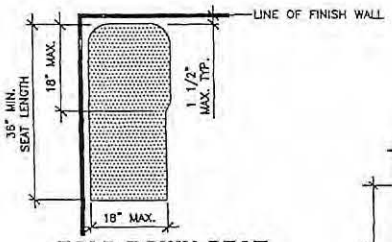

FOLD DOWN SEAT DIMENSIONS

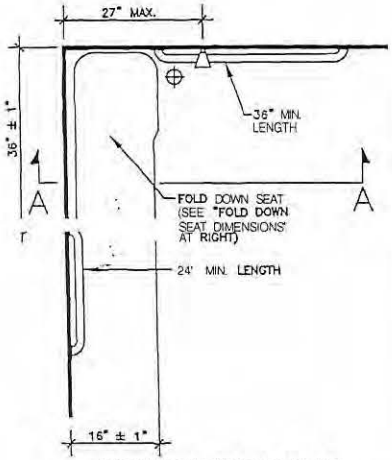

OPEN SHOWER PLAN

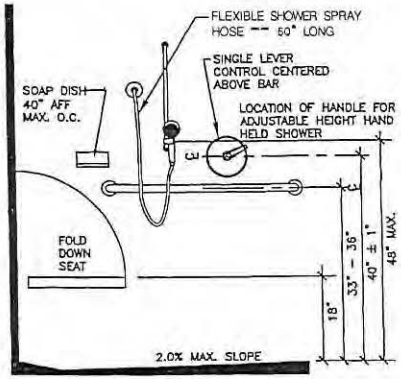

SECTION A-A

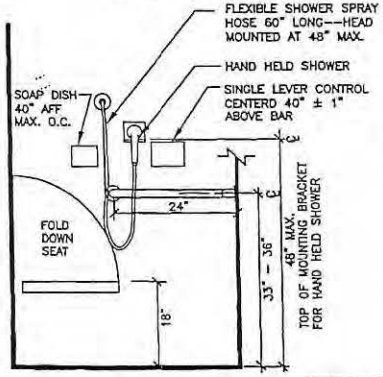

ELEVATION "A"

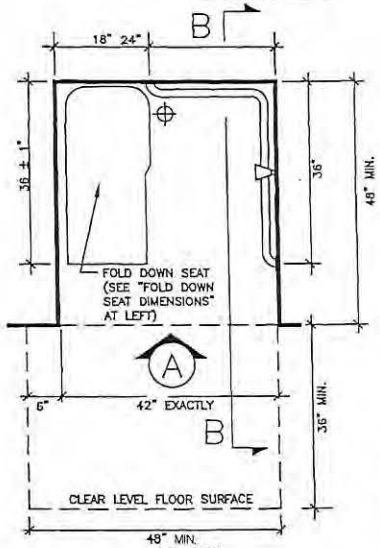

PLAN

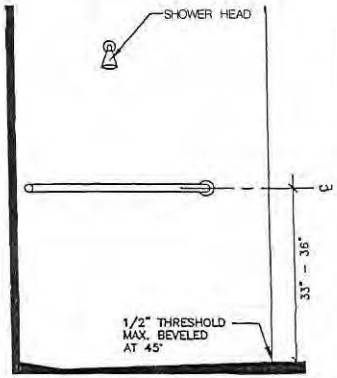

SHOWER PAN: SUP RESISTANT SURFACE--SLOPE 2% MAX. TO DRAIN---WHERE TWO SHOWERS ARE PROVIDED, ONE SHOWERSHALL BE OPPOSITE HAND FROM M.E OTHER.

SECTION B-B

SHOWERS
[SEC. 1115B.6.2]

NOTE: MAXIMUM SLOPE OF FLOOR 2% IN ANY DIRECTION. GRATE OPENINGS SHALL BE 1/4" MAX. WIDE AND FLUSH WITH FLOOR SURFACE

Information in this document is subject to change without notice. No part of this document may be reproduced or transmitted in any form or by any means, electronic or mechanical, for any purpose, without the express written permission of the San Francisco, California, Department of Public Works, Disability Access Coordinator.
© 1998 San Francisco, California, Department of Public Works, Disability Access Coordinator. All rights reserved.

■TUBS AND TUB ACCESS

[SEC. 1115B.6.1]

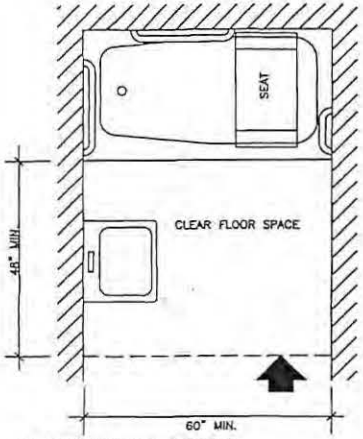

FRONT APPROACH WITH SEAT AT HEAD OF TUB

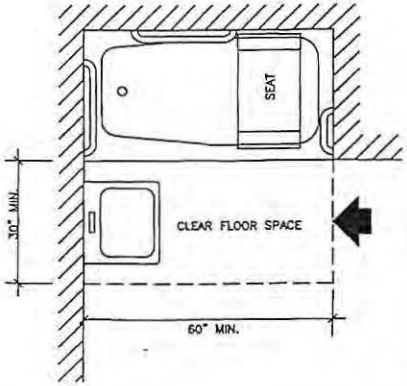

SIDE APPROACH WITH SEAT AT HEAD OF TUB

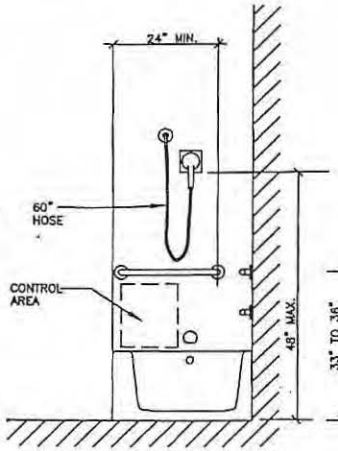

FOOT OF TUB

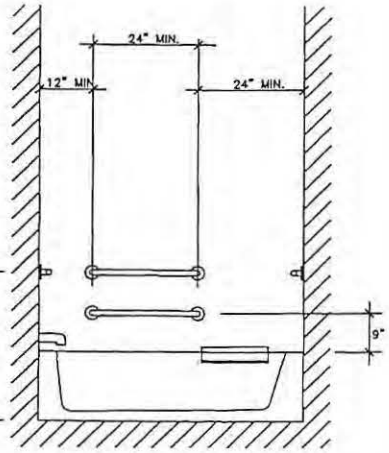

GRAB BARS AT BACK OF TUBS WITH SEAT AT HEAD OF TUB

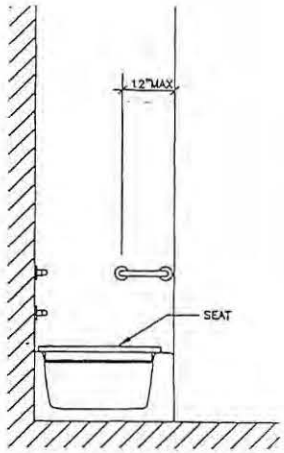

HEAD OF TUB

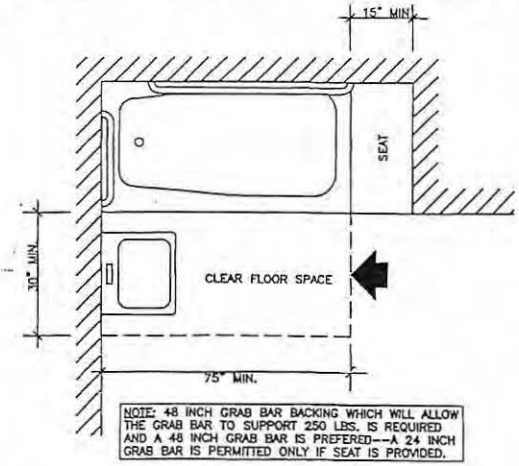

NOTE: 48 INCH GRAB BAR BACKING WHICH WILL ALLOW THE GRAB BAR TO SUPPORT 250 LBS. IS REQUIRED AND A 48 INCH GRAB BAR IS PREFERED--A 24 INCH GRAB BAR IS PERMITTED ONLY IF SEAT IS PROVIDED.

SIDE APPROACH WITH BUILT-IN SEAT AT HEAD OF TUB

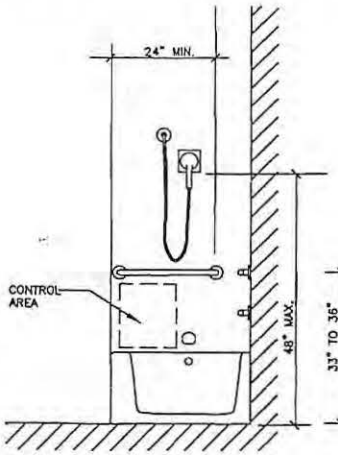

FOOT OF TUB

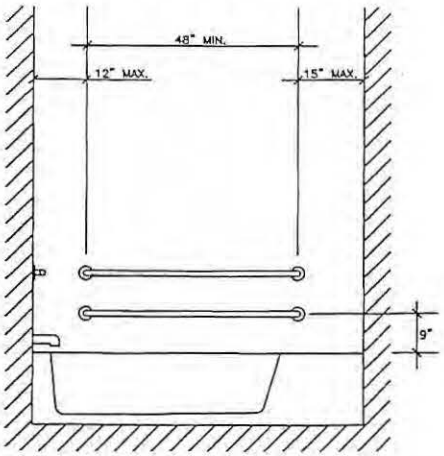

GRAB BARS AT BACK OF TUBS WITH BUILT-IN SEAT AT HEAD OF TUB

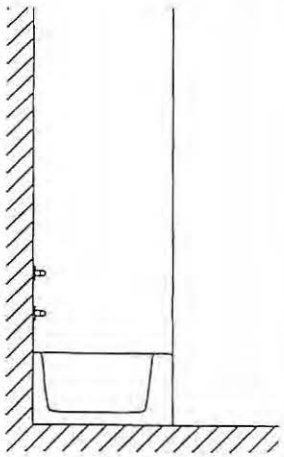

HEAD OF TUB

Information in this document is subject to change without notice. No part of this document may be reproduced or transmitted in any form or by any means, electronic or mechanical, for any purpose, without the express written permission of the San Francisco, California, Department of Public Works, Disability Access Coordinator.
© 1998 San Francisco, California, Department of Public Works, Disability Access Coordinator. All rights reserved.

SEATING AT TABLES, COUNTERS AND ASSEMBLY AREAS

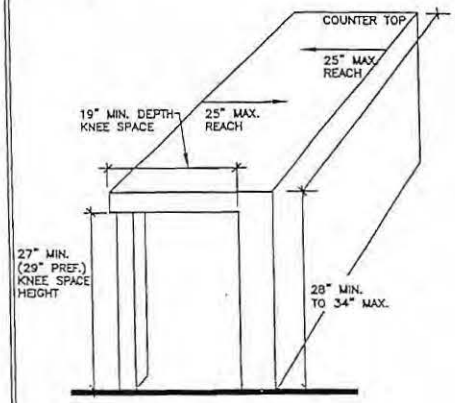

SECTION THROUGH ACCESSIBLE COUNTER

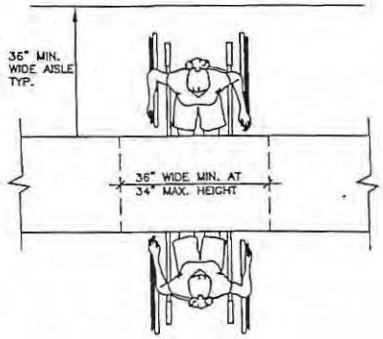

NOTE:
BACK SIDE OF COUNTER MAY HAVE OVERHANG OF THE SAME REQUIREMENTS SHOWN FOR THE FRONT SIDE OF COUNTER

NOTES:
1). KNEE SPACE IS REQUIRED ON THE EMPLOYEE SIDE OF COUNTER WHEN FACE TO FACE INTERACTION IS NECESSARY
2). KNEE SPACE IS RECOMMENDED ON THE CUSTOMER SIDE OF COUNTER WHERE FACE TO FACE INTERACTION OR WRITING IS NECESSARY
3). KNEE SPACE IS REQUIRED AT EATING COUNTERS

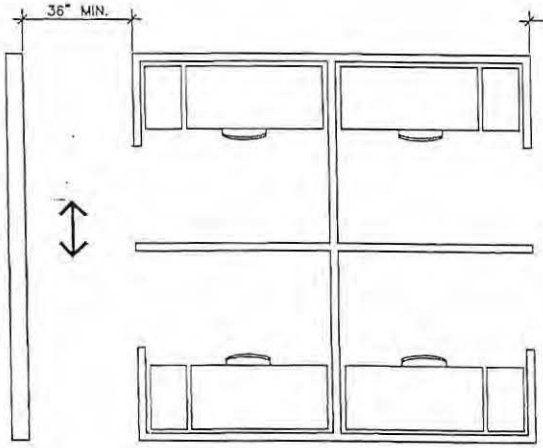

AISLE SERVING ONE SIDE

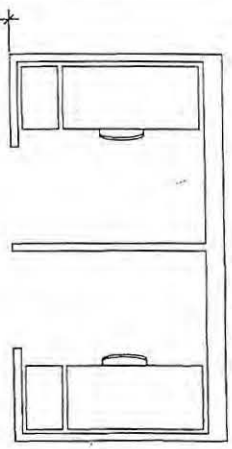

AISLE SERVING TWO SIDES

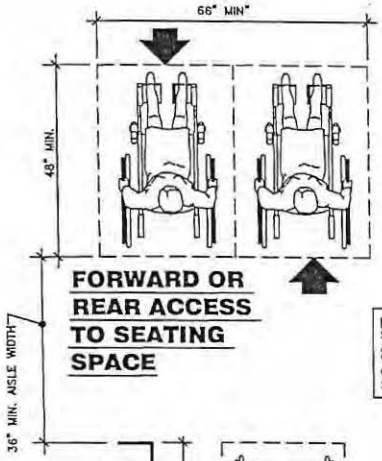

FORWARD OR REAR ACCESS TO SEATING SPACE

NOTE: EACH INDIVIDUAL SEATING POSITION HAS AN EGRESS ROUTE WHICH DOES NOT CROSS THROUGH OTHER SEATING POSITIONS

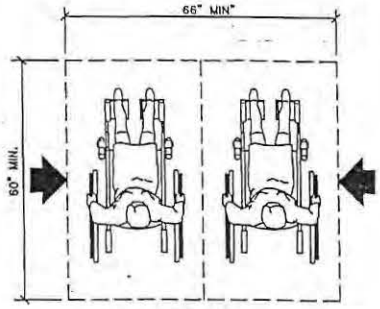

ACCESS TO SEATING SPACE FROM SIDE AISLE

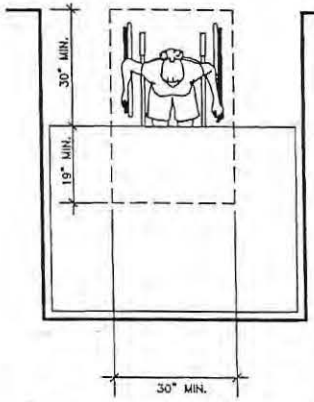

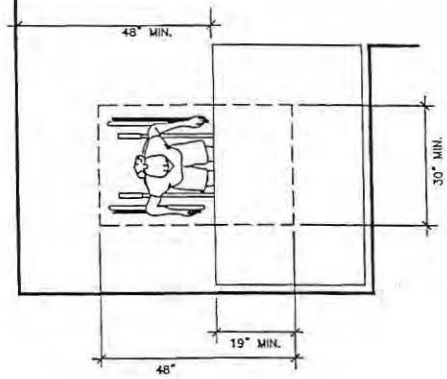

NOTES:
1). KNEE SPACE 27" HIGH CLEAR
2). WORKSURFACE 28" TO 34" FROM FLOOR

ACCESSIBLE TABLES

Information in this document is subject to change without notice. No part of this document may be reproduced or transmitted in any form or by any means, electronic or mechanical, for any purpose, without the express written permission of the San Francisco, California, Department of Public Works, Disability Access Coordinator.
© 1998 San Francisco, California, Department of Public Works, Disability Access Coordinator. All rights reserved.

■ SEATING IN ASSEMBLY AREAS AND SEMI-AMBULANT SEATING

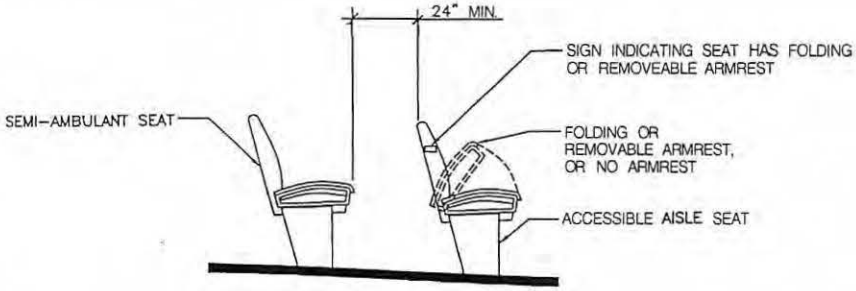

SEATING WITH FOLDING ARMREST OR WITHOUT ARMREST, AND **SEMI-AMBULANT** SEATING

NOTES:
1). SEMI-AMBULANT SEATING: AT LEAST 2 OR 1% OF TOTAL OF FIXED SEATING—PROVIDE 24' CLEAR LEG SPACE IN FRONT
2). 1% OF AISLE SEATS SHALL HAVE NO ARM RESTS OR REMOVABLE ARM RESTS
3). ALL REQUIRED ACCESSIBLE SEATING SHALL BE IDENTIFIED BY AN INTERNATIONAL SYMBOL
4). VARIOUS ACCESSIBLE SEATING TYPES SHOULD BE INTEGRATED AND DISPERSED THROUGHOUT SEATING ARRANGEMENT

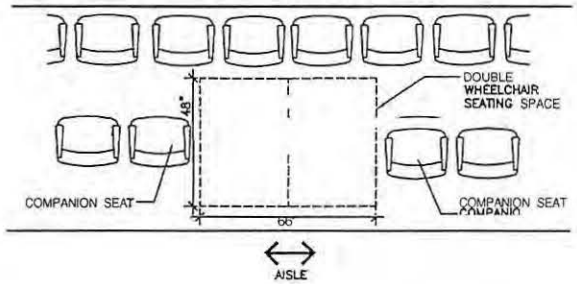

COMPANION SEATING SPACES ADJACENT TO WHEELCHAIR SEATING

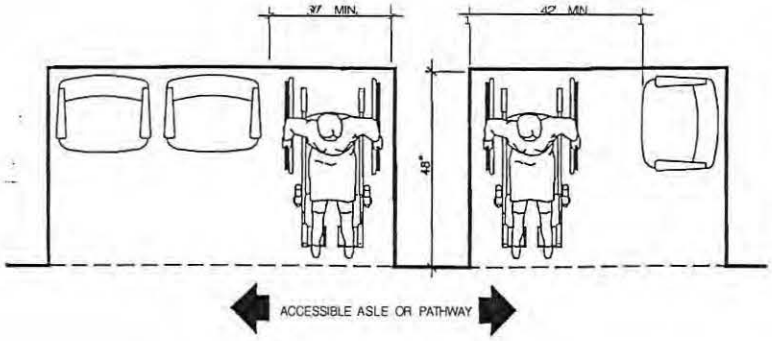

MINIMUM CLEARANCES FOR SEATING IN ALCOVES

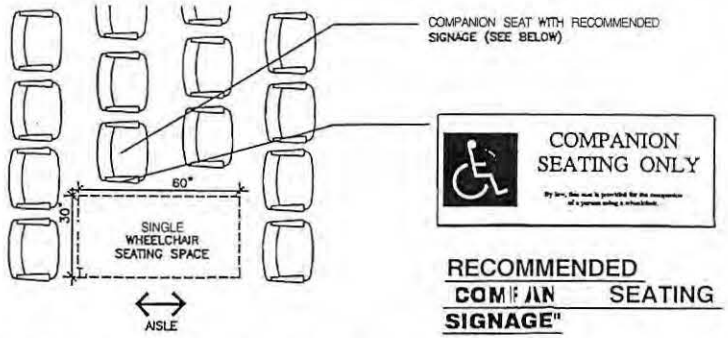

RECOMMENDED COMPANION SEATING SIGNAGE"

WHEELCHAIR SEATING SPACE ADJACENT TO AISLE IN ALCOVE

Information in this document is subject to change without notice. No part of this document may be reproduced or transmitted in any form or by any means, electronic or mechanical, for any purpose, without the express written permission of the San Francisco, California, Department of Public Works, Disability Access Coordinator.
© 1998 San Francisco, California, Department of Public Works, Disability Access Coordinator. All rights reserved.

TELEPHONES
[SEC. 1117B.2] [FIG. 11B-4]

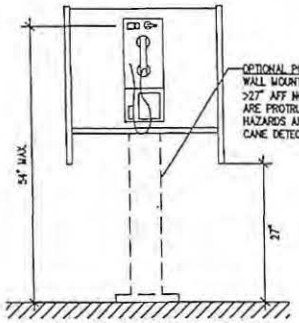

ELEVATION
SIDE APPROACH

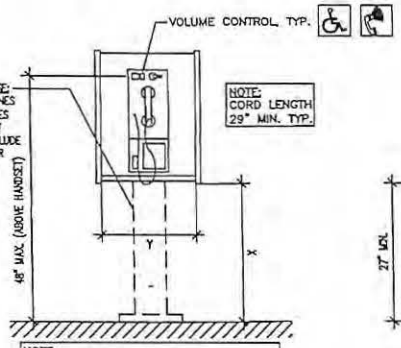

NOTE: IF Y < 30 INCHES THEN X > 27 INCHES

ELEVATION
FRONT APPROACH

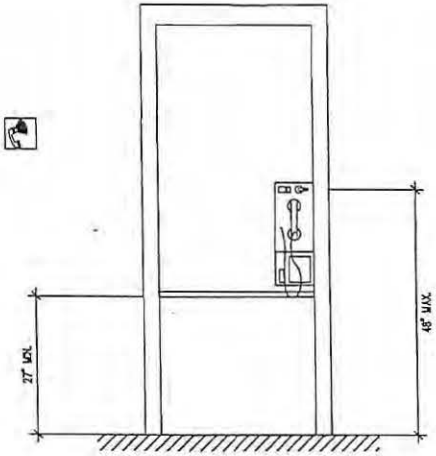

ELEVATION

NOTE: WALL MOUNTED TELEPHONES >27" AFF NOT IN ALCOVES ARE PROTRUDING OBJECT HAZARDS—INCLUDE CANE DETECTION BARRIER

NOTE: IF A BANK OF 3 OR MORE TELEPHONES IS PROVIDED, THEN A SHELF AND OUTLET FOR A TTY/TDD IS REQUIRED PER 1117B.2.9.2, ADAAG 4.1.3(17)(d)

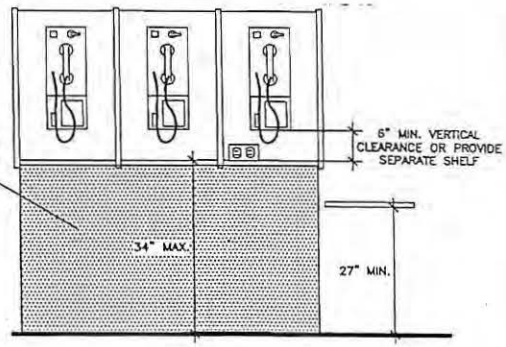

BANK OF TELEPHONES **WITH** SHELF AND OUTLET FOR **TTY/TDD**

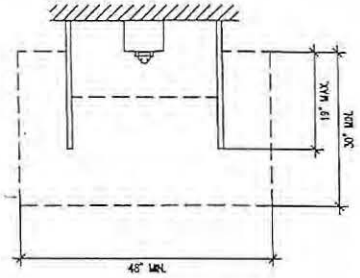

SIDE REACH POSSIBLE

PLAN

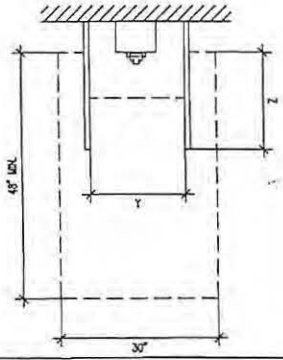

NOTE: IF Z > 12 INCHES, THEN Y SHALL BE 30 INCHES

FORWARD REACH POSSIBLE
(SIDE REACH NOT POSSIBLE)

PLAN

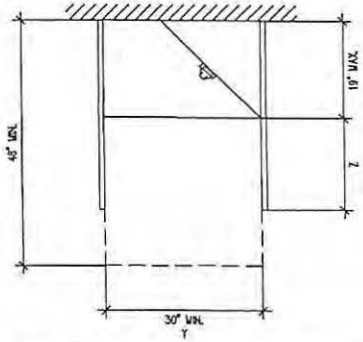

NOTE: IF Z > 24 INCHES THEN Y SHALL BE > 36 INCHES

FULL HEIGHT ENCLOSURE
(FORWARD REACH ONLY)

PLAN

NOTE: WHERE 4 OR MORE INTERIOR PAY TELEPHONES ARE PROVIDED, A TEXT TELEPHONE (TTY/TDD) IS REQUIRED. WHERE 3 OR MORE PAY TELEPHONES ARE LOCATED WITHIN A BANK OF TELEPHONES, PROVIDE A SHELF AND ELECTRICAL OUTLET.

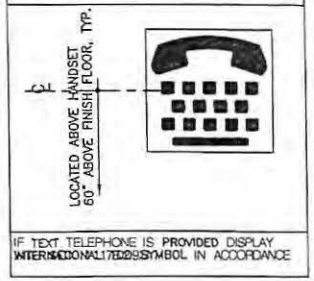

IF TEXT TELEPHONE IS PROVIDED DISPLAY INTERNATIONAL TDD SYMBOL IN ACCORDANCE

Information in this document is subject to change without notice. No part of this document may be reproduced or transmitted in any form or by any means, electronic or mechanical, for any purpose, without the express written permission of the San Francisco, California, Department of Public Works, Disability Access Coordinator.
© 1998 San Francisco, California, Department of Public Works, Disability Access Coordinator. All rights reserved.

PROTRUDING OBJECTS, OVERHANGING OBSTRUCTIONS, SIGNS AND SYMBOLS

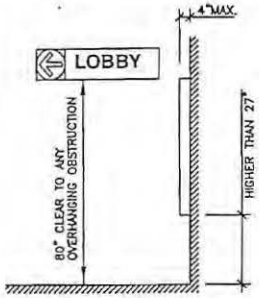

IF BOTTOM OF OBJECT IS ABOVE 27" **AFG/AFF**

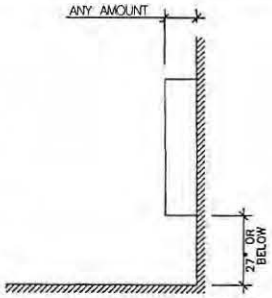

IF **BOTTOM** OF OBJECT IS BELOW 27" **AFG/AFF**

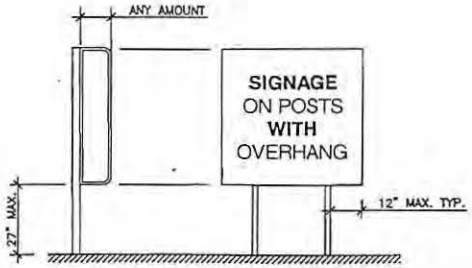

IF OBJECTS ARE MOUNTED ON POSTS OR PYLONS

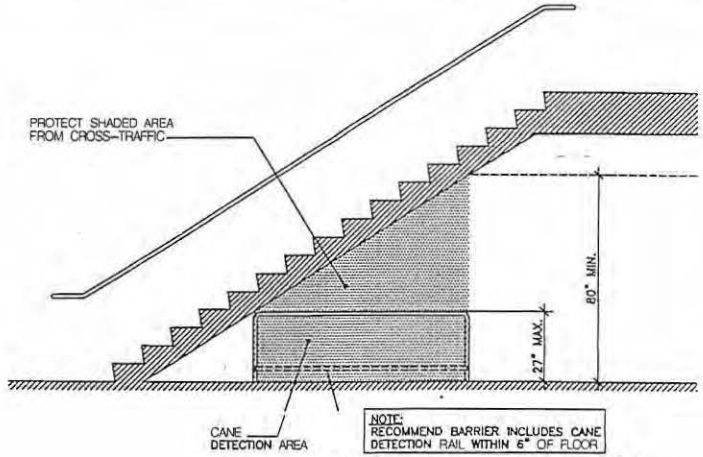

OVERHEAD HAZARDS AT STAIRS
[SEC. 1121B, ▮024; ADAAG **4.4.2**]
[FIG. ▮▮B-28, ▮0-4A]

PROTRUDING OBJECTS
[SEC. ▮121B] [HAZARDS–1**024**, FIG ▮**1B-7A**]
RESTROOM IDENTIFICATION
[SEC. ▮**115B.5**]
SIGNS AND IDENTIFICATION
[SEC. ▮**115B.5**]

RECOMENDED: NO RAISED, PICTOGRAM, BRAILLE OR RAISED LETTERS ON CIRCLE/TRIANGLE CALIFORNIA TIE 24 DOOR SIGNS

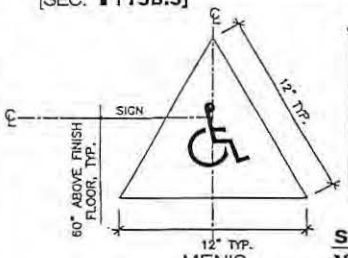

MEN'S — **SIDE VIEW**

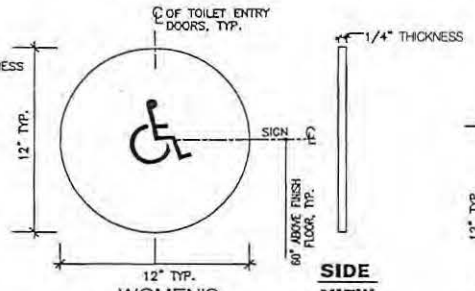

WOMEN'S — **SIDE VIEW**

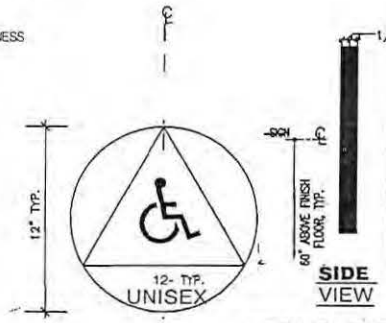

UNISEX — **SIDE VIEW**

NOTES:
1). LETTERS AND NUMBERS ON SIGNS SHALL BE RAISED CONTRASTING IN COLOR, AND HAVE A WIDTH-TO-HEIGHT RATIO OF BETWEEN 3:5 AND 1:1, AND STROKE WIDTH TO HEIGHT RATIO BETWEEN 1:5 AND 1:10, AND RAISED 1/32" MINIMUM, AND BE ACCOMPANIED BY BRAILLE
2). WHERE PERMANENT SIGNAGE IS PROVIDED FOR ROOMS AND SPACES, SIGNAGE AS DESCRIBED ABOVE SHALL ALSO BE PROVIDED ON THE STRIKE SIDE OF THE DOOR

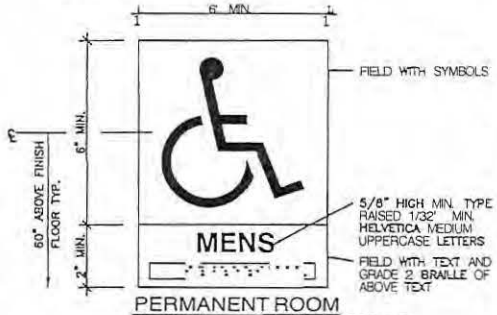

PERMANENT ROOM IDENTIFICATION **SIGNAGE**
[SEC. 1117B.5]

INTERNATIONAL SYMBOL OF ACCESSIBILITY

INTERNATIONAL TDD SYMBOL

INTERNATIONAL SYMBOL INDICATING AVAILABILITY OF AN ASSISTIVE LISTENING SYSTEM

INTERNATIONAL VOLUME CONTROL SYMBOL

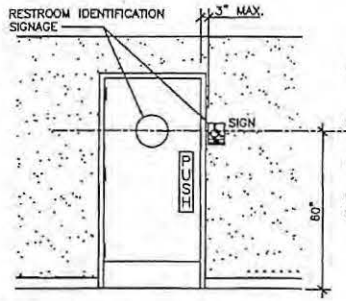

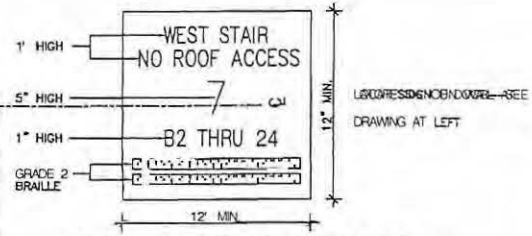

STAIRWELL **FIRE IDENTIFICATION**
[SEC. 1006.16]

Information in this document is subject to change without notice. No part of this document may be reproduced or transmitted in any form or by any means, electronic or mechanical, for any purpose, without the express written permission of the San Francisco, California, Department of Public Works, Disability Access Coordinator.
© 1998 San Francisco, California, Department of Public Works, Disability Access Coordinator. All rights reserved.

■ **DRINKING** FOUNTAINS, VENDING MACHINES AND CONTROLS

NOTES:
1). A DRINKING FOUNTAIN SHALL BE LOCATED IN AN ALCOVE WHICH IS NOT LESS THAN 32" WIDE AND 18" DEEP, WITH AN APPROVED UNREASONABLE HARDSHIP. A DRINKING FOUNTAIN MAY PROJECT INTO M E PATH OF TRAVEL WHEN WING WALLS, GUARDRAILS OR A TEXTURED FLOOR SURFACE ARE USED. SEE ILLUSTRATIONS ON MIS SHEET AND ON SHEET 17OF MIS DOCUMENT.
2). M E WATER STREAM MUST BE PARALLEL TO AND WITHIN 6" OF M E FRONT OF M E ACCESSIBLE DRINKING FOUNTAIN

SEE SHEET 17 FOR ALTERNATES

NOTE:
THERE SHALL BE A DRINKING FOUNTAIN WHICH IS ACCESSIBLE TO INDIVIDUALS WHO USE WHEELCHAIRS AND ONE ACCESSIBLE TO MOSE WHO HAVE DIFFICULTY BENDING AND STOOPING

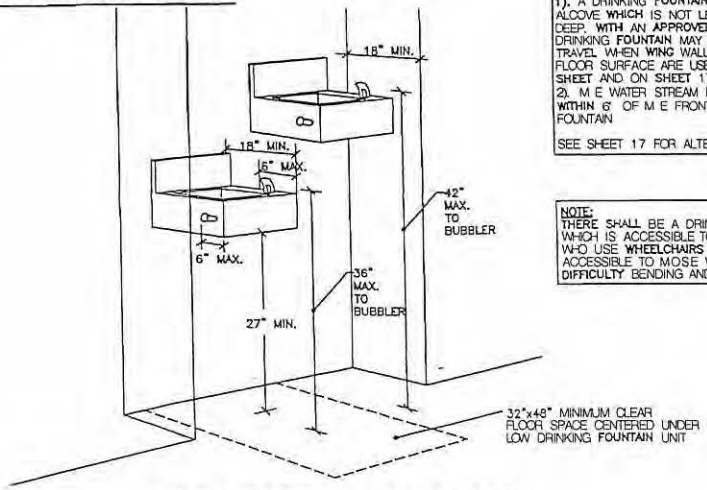

HI/LOW DRINKING FOUNTAINS
IN AN ALCOVE

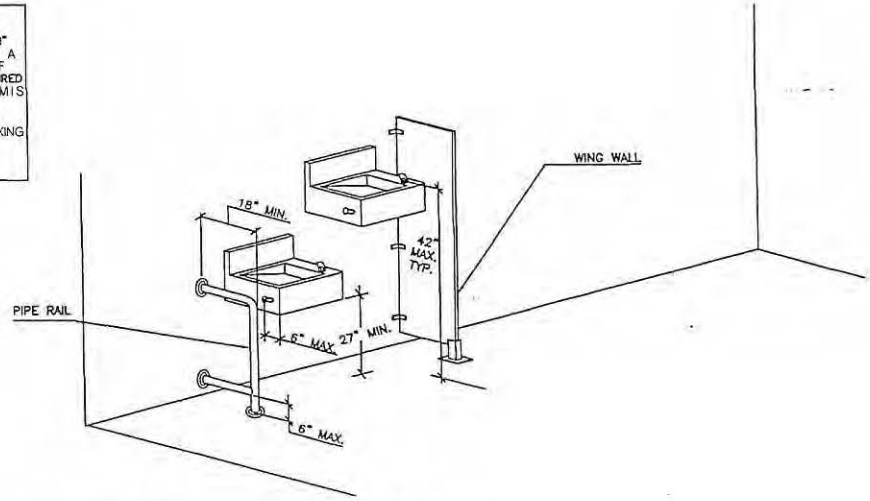

HI/LOW DRINKING FOUNTAINS
WITH RAIL OR **WING** WALL

DRINKING FOUNTAINS
[SEC. **11**178.1 PART 5 PLUMB. SEC. 1507.31
[FIG. **11B-3]**

FIRE ALARMS
[SEC. **1114B.2.5, 3504.1** & **NFPA72]**

NOTE: FOR FIRE ALARM STROBE LOCATIONS, CONTACT LOCAL FIRE MARSHALL

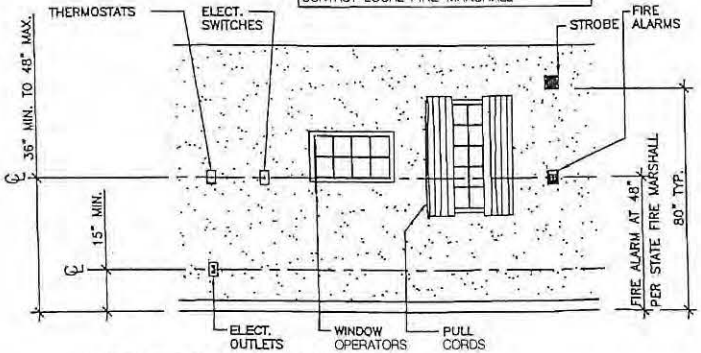

CONTROLS AND OUTLETS
[SEC. 1117B.6];
[SEE **SEC. 210-7** & **380-8** CALIFORNIA ELECTRIC CODE]

NOTE: VENDING MACHINE CONTROLS SHALL BE OPERABLE WITH ONE HAND AND SHALL NOT REQUIRE TIGHT GRASPING, PINCHING, OR TWISTING OF THE WRIST

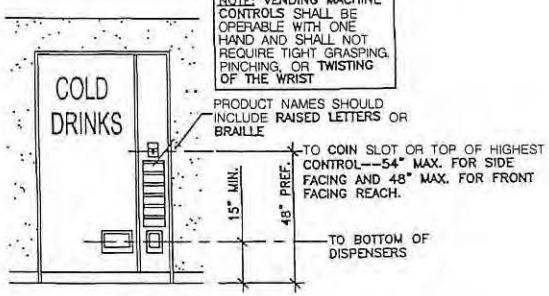

VENDING MACHINES
[SEC. **1126B]**

Information in this document is subject to change without notice. No part of this document may be reproduced or transmitted in any form w by any means, electronic or mechanical, for any purpose, without the express written permission of the San Francisco, California, Department of Public Works, Disability Access Coordinator.
© 1998 San Francisco, California, Department of Public Works, Disability Access Coordinator. All rights reserved.

ACCEPTABLE ALTERNATIVES IN EXISTING BUILDINGS AND SUGGESTED LOCATIONS OF KITCHEN CONTROLS

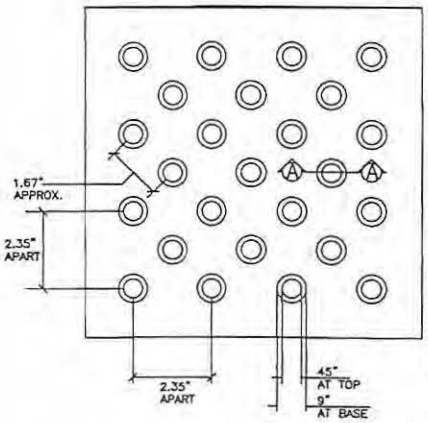

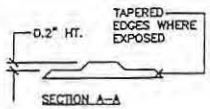

NOTE:
DECTECTABLE WARNINGS SHALL BE PLACED AT CURB RAMPS WHERE SURFACES SLOPE<1:15 (SEE CURB RAMPS) AT HAZARDOUS VEHICULAR AREAS, AND AS A 24" TO 36" WIDE STRIP AT DROP OFF EDGES OF BOARDING PLATFORMS

DETECTABLE WARNINGS AT TRANSIT VEHICLE BOARDING PLATFORMS
[SEC. 1127B.5.8, 1024.3, 1024.4, 1024.5]
[FIG. 11B-23A]

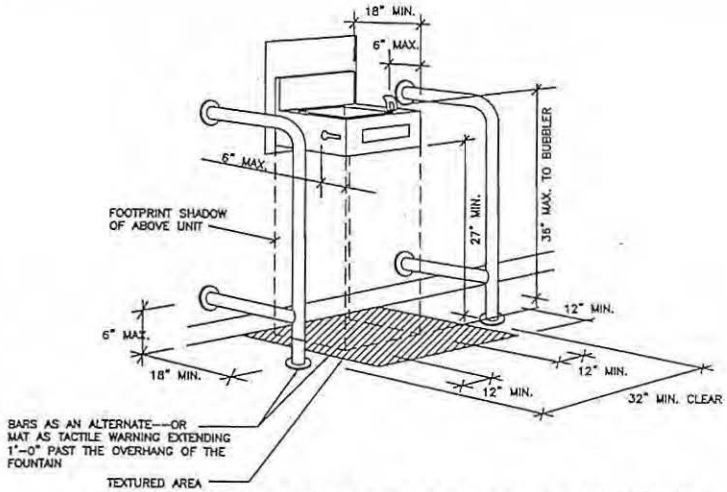

TEXTURED AREA OR RAILS AT DRINKING FOUNTAINS
[SEC. 1117B.1.2 (EXCEPTION)]

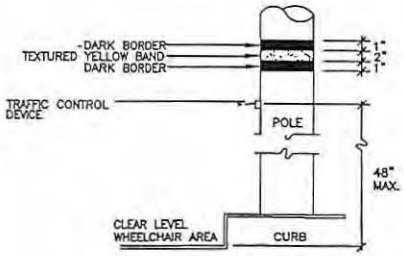

TRAFFIC CONTROL DEVICES
[SEC. 1117B.5.10]

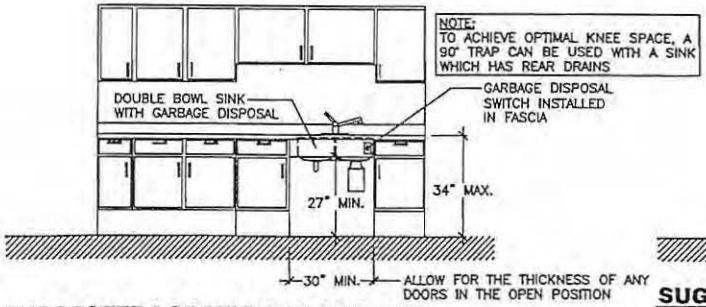

NOTE:
TO ACHIEVE OPTIMAL KNEE SPACE, A 90° TRAP CAN BE USED WITH A SINK WHICH HAS REAR DRAINS

SUGGESTED LOCATION OF GARBAGE DISPOSAL CONTROLS AT KITCHEN SINK

[HEIGHT AND CLEARANCE DIMENSIONS ARE RECOMMENDED]

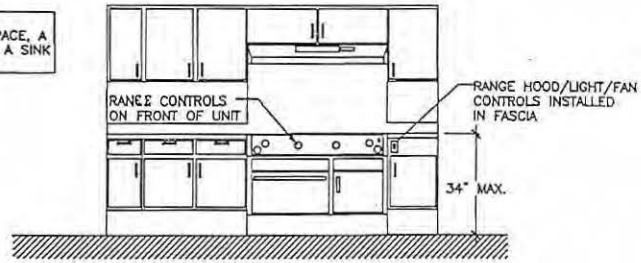

SUGGESTED LOCATION OF KITCHEN RANGE AND RANGE HOOD CONTROLS

Information in this document is subject to change without notice. No part of this document may be reproduced or transmitted in any form or by any means, electronic or mechanical, purpose, without the express written permission of the San Francisco, California, Department of Public Works, Disability Access Coordinator.
© 1998 San Francisco, California, Department of Public Works, Disability Access Coordinator. All rights reserved.

REACH RANGES FOR SEATED PEOPLE

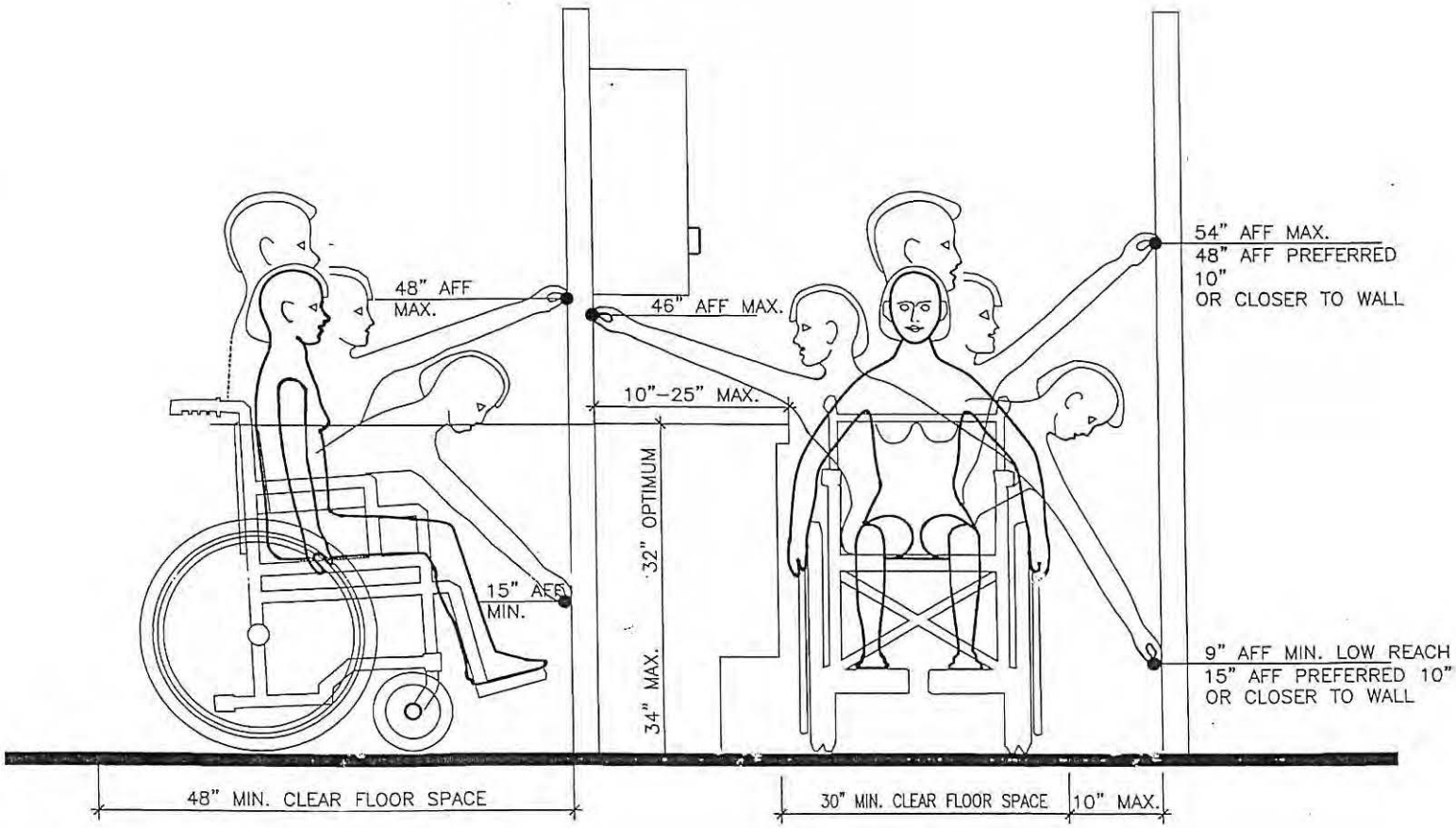

FORWARD REACH **SIDE REACH**

Information in this document is subject to change without notice. No part of this document may be reproduced or transmitted in any form or by any means, electronic or mechanical, for any purpose, without the express written permission of the San Francisco, California, Department of Public Works, Disability Access Coordinator.
©1998 San Francisco, California, Department of Public Works, Disability Access Coordinator. All rights reserved.

SIGHTLINE SLOPE

NOTES:
THE SEATING BOWL IS DESIGNED ON SEATED LINES OF SIGHT. THE HEIGHT OF THE PLATFORM ABOVE THE TREAD IN FRONT IS BASED ON THE STANDING LINE OF SIGHT. M E LINE OF SIGHT FOR THE IS PARALLEL TO THEIR LINE OF SIHT IN M E SEATED POSITION.
M E "C" VALUE IS THE DESIGN CRITERIA USED FOR SEATED SPECTATORS [2 1/4" TYP.] AND ALSO APPLIES TO STANDING SPECTATORS AND SPECTATORS SEATED IN A WHEELCHAIR

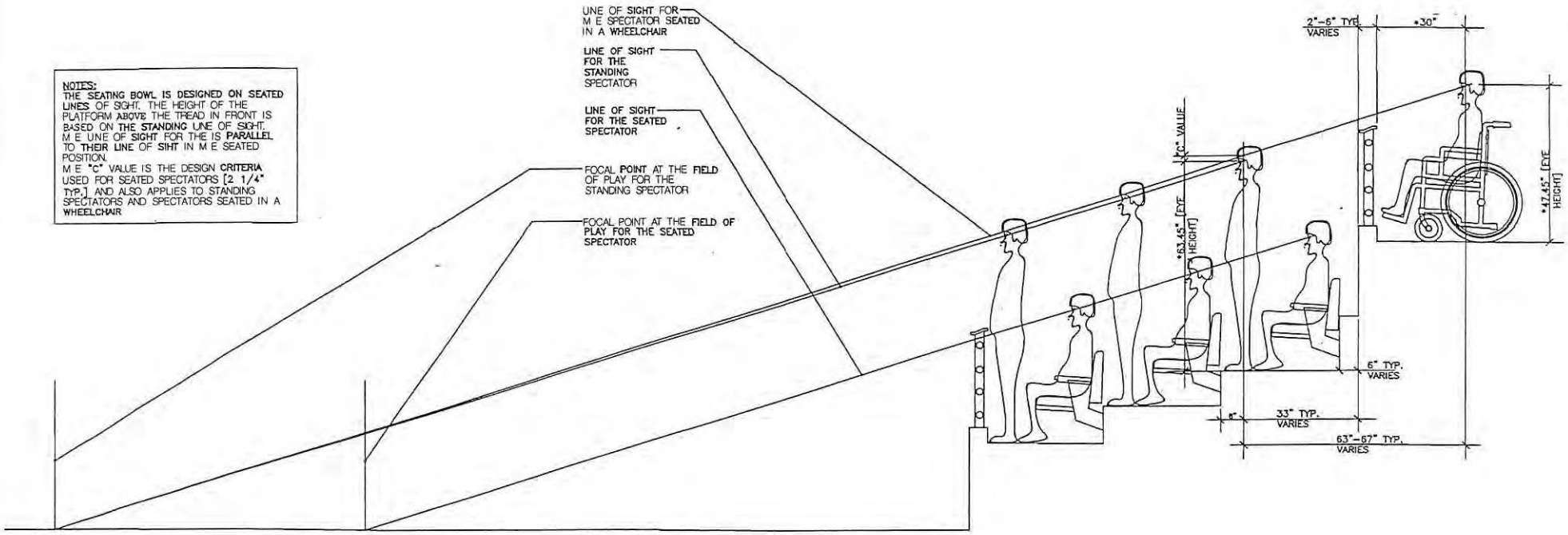

SIGHTLINE SLOPE DIAGRAM

• = D.O.J. ESTABLISHED CRITERIA

Information in this document is subject to change without notice. No part of this document may be reproduced or transmitted in any form or by any means, electronic or mechanical, for any purpose, without the express written permission of the San Francisco, California, Department of Public Works, Disability Access Coordinator.
© 1998 San Francisco, California, Department of Public Works, Disability Access Coordinator. All rights reserved.

7) Vision of Deliverable

a) Samples of different styles of checklists:

ii) Richards Skaff/Restaurant Association

Designing Accessible Communities™

A non-profit organization

Designing Accessible Communities

Restaurant Accessibility Field Guide

with references to 2010 CBC Title 24 and 2010 ADA Standards

Richard Skaff, Executive Director
[1]PO Box 2579, Mill Valley, CA 94942
DAC is a 501(c)3 Non-Profit Organization.

www.designingaccessiblecommunities.org
Voice and Fax: 415.388.7206 California Relay Service – Dial 711
richardskaff@designingaccessiblecommunities.org

Credits

Richard Skaff
Code Research, Editing

BJ Dietz Epstein
Code Research, Editing, Graphics and Layout

Special Thanks

Richard Skaff, the Founder and Executive Director, and the Board of Directors of Designing Accessible Communities, and would like to thank the following people for the time, energy, and expertise they provided in their peer review of this document:

Peter Margen, CASp 011
Principal Consultant, Margen + Associates
www.margenassociates.com
pmargen@gmail.com
925-934-3440

Gilda Puente-Peters, CASp 024, CASI, OWA
Principal, Gilda Puente-Peters Architects, Certified Access Specialists
www.gppaarchitects.com
gilda@gppaarchitects.com
510-526-6226

Steven Winkel, FAIA, PE
Building and Access Code Consultant, The Preview Group, Inc.
www.preview-group.com
swinkel@preview-group.com
510-547-7748

Jonathan Adler, CASp 003, ICC Accessibility Inspector/Plans Examiner #0886919-2, CA Contractor License #707965
Principal Consultant, Access Compliance Services
www.accesscomplianceservices.net
ja-acs@sbcglobal.net
831-429-4191

We would also like to thank the Independent Living Rescource Center - San Francisco and its Executive Director, **Jessie Lorenz**, (www.ilrcsf.org, jessie@ilrcsf.org, 415-543-6222) for the grant from the Herb Levine Fund that helped to fund this project.

Your Comments

We have made every effort to make this document easy to understand and complete in its information. If, however, in the course of using the DAC *Restaurant Accessibility Field Guide*, you find missing or confusing information, or have questions or comments, please contact Richard Skaff at richardskaff@designingaccessiblecommunities.org.

© June 2012 Designing Accessible Communities. All rights reserved.

General Notes

The diagrams within the Designing Accessible Communities *Restaurant Accessibility Field Guide* graphically illustrate many of the requirements of the California Building Code (CBC), Title 24, the Americans with Disabilities Act Standards (ADAS), and recommended best practices.

This *Restaurant Accessibility Field Guide* is intended to be used as an aid for building design and construction, as well as inspection. Designing Accessible Communities (DAC) and its Board of Directors and Executive Director assume no liability in the use or misuse of the DAC *Restaurant Accessibility Field Guide*. This document represents an effort to integrate the most restrictive requirements of the above named codes, standards and guidelines. It also makes suggestions for improved accessibility not covered in those requirements. The DAC *Restaurant Accessibility Field Guide* is intended for use only as a guide in conjunction with the above named regulations. Since the *Restaurant Accessibility Field Guide* was not prepared by any of the agencies responsible for developing the standards listed above, this document should only be considered an interpretation of those standards.

All minimum, maximum, and exact dimensions are to be exact within the limits of modern measurement unless otherwise specified in the CBC or ADAS. All dimensions are "finish-to-finish" dimensions. For example, specifications for a toilet centered at 18 inches from the side wall means that the centerline of the toilet is 18 inches from the finished surface of drywall, tile, or other finished wall surface.

The Access Board has made changes to measurements that had previously fixed at an absolute dimension, allowing for tolerances. However, there has not been sufficient research and interaction with the disability community to determine if these new tolerances will still afford the same level of accessibility in the built environment. Any changes of this nature should be based on research and input from people with disabilities whose access may be affected.

Richard Skaff

Richard Skaff
Founder and Executive Director
Designing Accessible Communities
P.O. Box 2579
Mill Valley, CA 94942
Voice/Fax: 415-388-7206
Cell: 415-497-1091
Email: richardskaff@designingaccessiblecommunities.org
Web: www.designingaccessiblecommunities.org

Note on Printing from a Home/Work Computer: Set margins to .25" on all sides in order to ensure all material is contained on the printout.

© June 2012 Designing Accessible Communities. All rights reserved.

Table of Contents

Legend 5
ADAS and CBC, Title 24 Information 6

Parking 7
Curb Ramps 8
Detectable Warnings 10
Ramps 11
Handrails 13
Stairs 15
Doors 17
Corridors 20
Fire Alarm Pull Stations 21
Elevators 22
Wheelchair Lifts 25
Tactile Emergency Evacuation Signs 26
Restroom Signage 27
Toilet Facilities 29
Restroom Fixtures 36
Lavatories 37
Telephones 39
Protruding Objects 40
Reach Ranges 41
Restaurant Seating 42
Bars/Counters 45
Path of Travel 46
Sample Seating Chart 47

Contacts 48
Checklist 49

© June 2012 Designing Accessible Communities. All rights reserved.

LEGEND

AFF = ABOVE FINISH FLOOR

TYP. = TYPICAL

MIN. = MINIMUM

MAX. = MAXIMUM

CLR. = CLEAR

> = GREATER THAN

< = LESS THAN

℄ = CENTER LINE

O.C. = ON CENTER

W/ = WITH

INT. = INTERIOR

EXT. = EXTERIOR

LEVEL = LESS THAN 1:50 (2%) SLOPE IN ANY DIRECTION

BEST PRACTICE:
= SUGGESTIONS FOR BETTER ACCESS THAT MAY NOT NECESSARILY BE SPECIFIED IN THE CODES

ADAS = 2010 AMERICANS WITH DISABILITIES ACT STANDARDS*
References in italic blue type (i.e. 502)

CBC = 2010 CALIFORNIA BUILDING CODE, Title 24, Part 2*
References in bold red type (i.e. 1129B.3)

*NOTE: Citations from both regulations are listed concerning particular accessibility features. However, in some cases, the requirement is only required by one of the regulations. We believe that we have provided the information describing the most restrictive requirements from both sets of regulations.

© June 2012 Designing Accessible Communities. All rights reserved.

2010 ADA Standards and 2010 CBC, Title 24 Information

2010 Americans with Disabilities Act Standards for Accessible Design (2010 ADAS)

What it is:
The U.S. Department of Justice published an updated and revised document, the official online version of the 2010 ADA Standards for Accessible Design, on September 15, 2010. It provides the scoping and technical requirements for new construction and alterations resulting from the adoption of revised 2010 Standards in the final rules for Title II and Title III. This document provides requirements and recommendations for ensuring equal opportunity for persons with disabilities in places of employment, State and local government services, public accommodations, commercial facilities, and transportation.

Compliance Effective Date: March 15, 2012
If the start date for construction is on or after this date, all newly constructed or altered State and local government faciliites (Title II) must comply with the 2010 ADA Standards. For public accommodations and commercial facilites (Title III), all projects whose permit applciation date is on or after this date must comply with the 2010 ADA Standards.

Where to Find:
On the U.S. Department of Justice, ADA website:
http://www.ada.gov/2010ADAstandards_index.htm
OR
The U.S. Department of Justice provides free ADA materials. Printed materials may be ordered by calling the ADA Information Line (1-800-514-0301 (Voice) or 1-800-514-0383 (TTY)). Automated service is available 24-hours a day for recorded information and to order publications.

2010 California Building Codes, Title 24, Part 2, Chapter 11B (2010 CBC)

What it is:
This is part of the official triennial compilation and publication of the adoptions, amendments and repeal of administrative regulations to California Code of Regulations, Title 24, also referred to as the California Building Code. Title 24, Part 2, Chapter 11B is the portion that refers specifically to Accessibility to Public Buildings, Public Accomodations, Commerical Buildings and Publicly Funded Housing.

Compliance Effective Date: January 1, 2011
For new construction or alteration projects beginning constructionon or after this date.

Where to Find:
California's building codes are published by the International Code Council (ICC) and may be purchased directly from the council. Visit the online store at www.iccsafe.org, or call 800-786-4452 for order information.
An online version is available here:
http://publicecodes.citation.com/st/ca/st/b200v10/index.htm

© June 2012 Designing Accessible Communities. All rights reserved.

PARKING

Path of Travel
1133B.7.1
-48" wide min.

Curb Ramps
1129B.3.3
-See Curb Ramps, p. 8-9
-Cannot project into parking space or access aisle

Identification Signs
1129B.4
-70 sq. in. min.
-Posted at 80" min. to bottom

Wheel Stop
1129B.3.3
-Shall prevent reduction of 48" min. req'd Path of Travel by vehicles overhanging into walkway

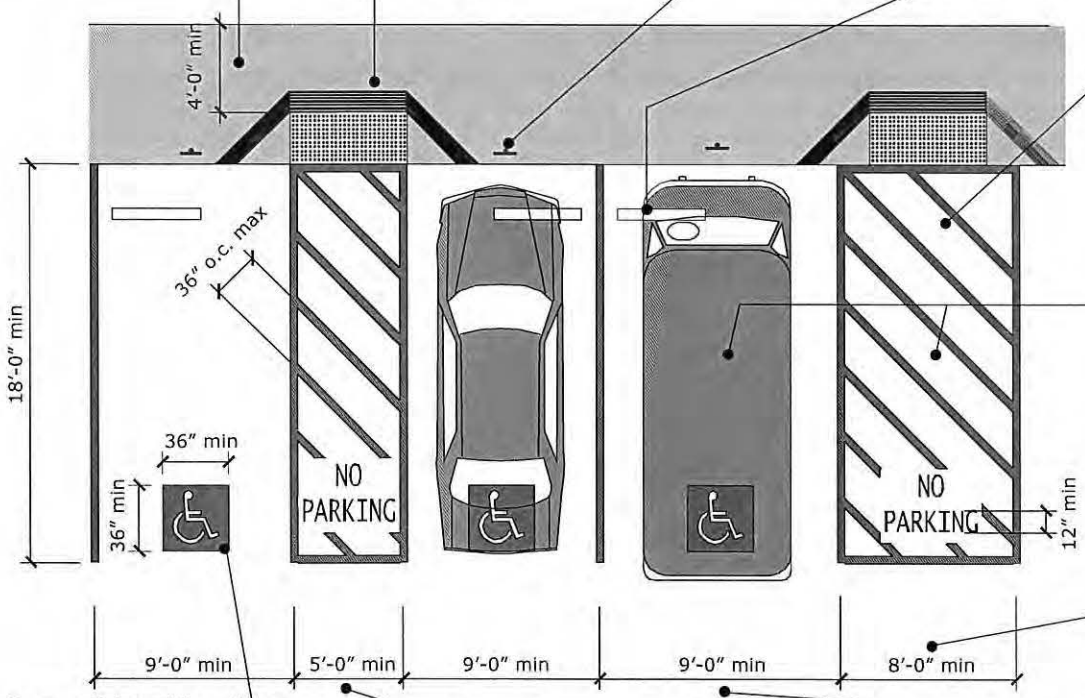

Access Aisle
1129B.3
-Shall be marked by a blue painted border
-Within, hatched lines shall be painted color contrasting parking surface (blue or white preferred)
-Keep clear of obstructions

Slope of Spaces & Aisles
1129B.3, *502*
-Min. possible
-Not to exceed 2% slope in any direction

No Parking in Access Aisles
-12" min. high white lettering
-Bold typeface

Van Access Aisle
1129B.3
-On passenger side only

Van Accessible Space
208
-9' min. wide
-Min. 1 per 6 accessible spaces
-if only one accesssible space provided, must be van accessib

Space Identification
1129B.4
-36"x36" blue square w/ ISA in white

Car Access Aisle
1129B.3
-Can be shared by 2 spaces
-On passenger side if only 1 car acc. space provided

Accessible Space Dimensions
1129B.3
-18' min. length
-9' min. width, measured to centerlines of striping

International Symbol of Accessibility (ISA)
-Wheelchair profile:

Identification Signs
1129B.4
-Show ISA in white on dark blue background
-70 sq. in. min.
-Posted at 80" min. to bottom if in path of travel
-Additional language/sign stating "Mimimum Fine $250"
-Van Accessible spaces to be marked with additional language/sign

"Unauthorized Vehicles" Sign
1129B.4
-Placed conspicuously near parking lot entrance or immediately adjacent to & visible from each accessible stall
-Min. 17" x 22" with 1" high lettering, black on white background
-Blank spaces must be filled out with proper information

REQUIRED ACCESSIBLE SPACES TABLE 11B-6, *TABLE 208.2*	
Total #	# Accessible
1-25	1
26-50	2
51-75	3
76-100	4
101-150	5
151-200	6
201-300	7
301-400	8
401-500	9
501-1000	2%
1001+	*

NOTES:
*20, +1 per 100 (or fraction thereof) over 1000
-For every 6 accessible parking spaces, 1 must be van accessible *(208)*

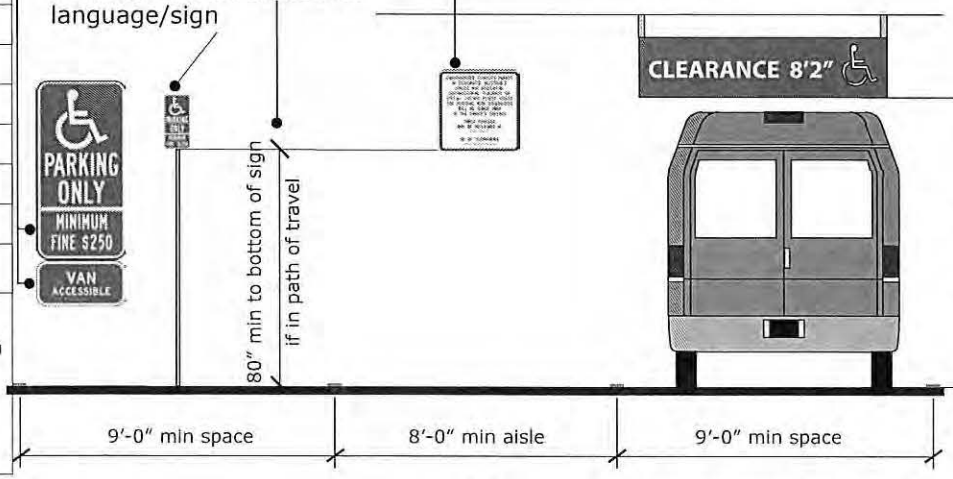

Vertical Clearance
1129B.3, *502*
-98" min. at acc. parking spaces & along at least one vehicle access route to such spaces to allow van clearance

© June 2012 Designing Accessible Communities. All rights reserved.

Curb Ramps

General
1127B.5.5, *406*
-Construct curb ramps at each corner of street intersections and where a pedestrian way crosses a curb
-Surfaces shall be stable, firm, and slip resistant and shall be of contrasting color or texture from that of the adjacent sidewalk

Level Landing
1127B.5.4
-4′ deep minimum level landing at top of curb ramp for full width of ramp

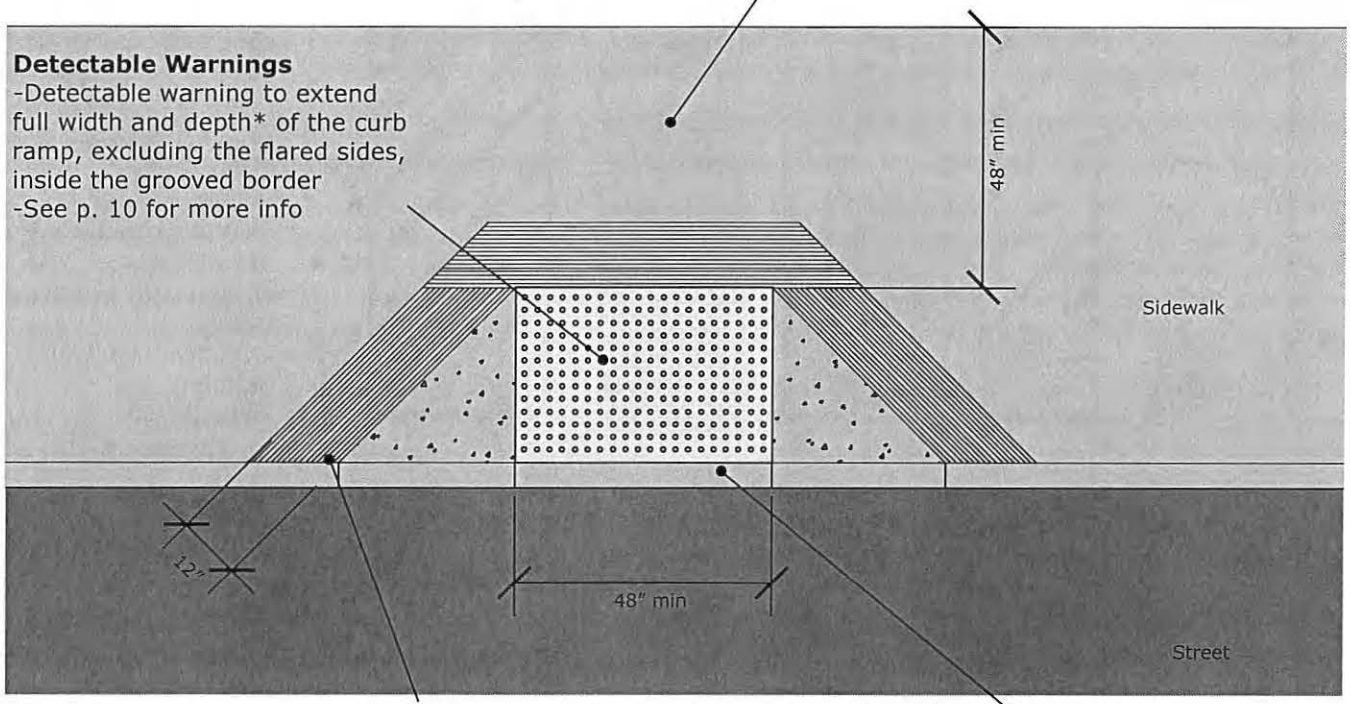

Detectable Warnings
-Detectable warning to extend full width and depth* of the curb ramp, excluding the flared sides, inside the grooved border
-See p. 10 for more info

Border
1127B.5.6
-All curb ramps shall have a grooved border 12″ wide at the level surface of the sidewalk along the top and each side
-1/4″ grooves shall be approx. 3/4″ on center

Curb Ramp Width
1127B.5.2
-4′ wide minimum

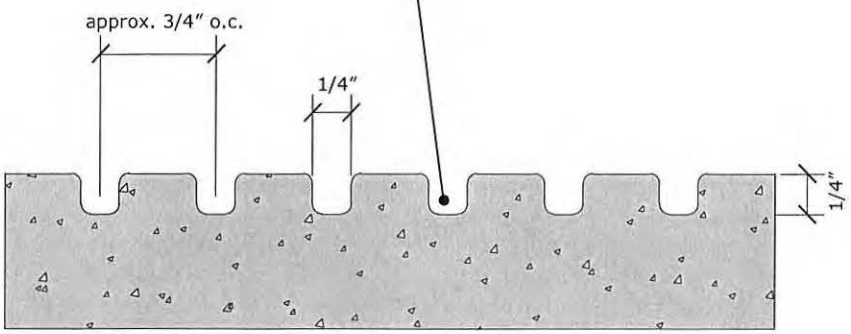

Groove Detail
Fig. 11B-20D

NOTE:
The California Division of the State Architect allows for an acceptable alternative design where the detectable warning surface extends 36″ min. in the direction of travel for the full width of the curb ramp. [DSA Interpretation of Regulations Document: DSA (AC) IR 11B-4 (3)]

© June 2012 Designing Accessible Communities. All rights reserved.

Curb Ramp Slopes

Parallel Ramps
1127B.5 Note 5 (Fig. 11B-20B, Case C)
-Where this is not enough room to install a 48″ min. wide top landing, slope entire width of sidewalk down to landing level with adjacent street
-Max. slope 1:12 (8.33%)
-Include grooved border on top end of curb ramp, at level surface of sidewalk

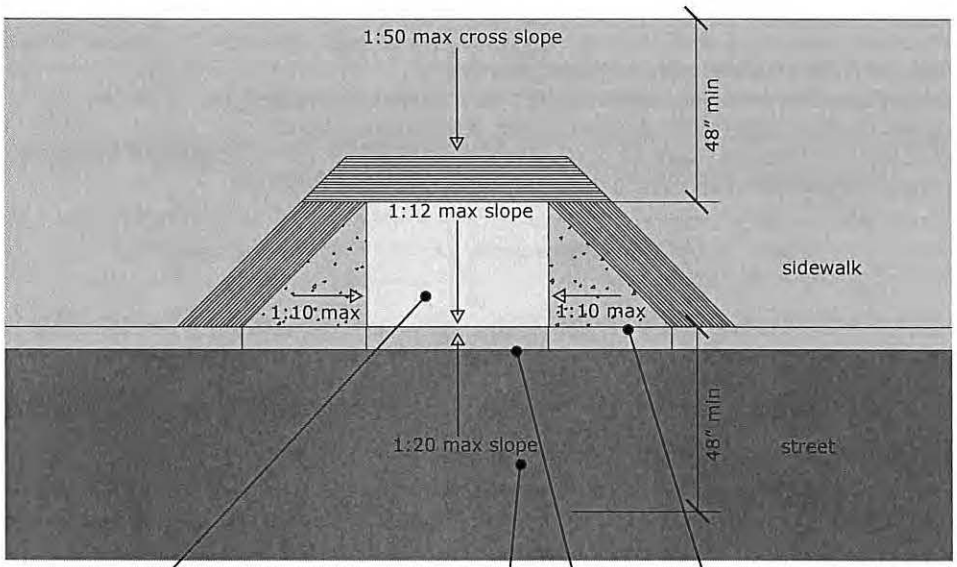

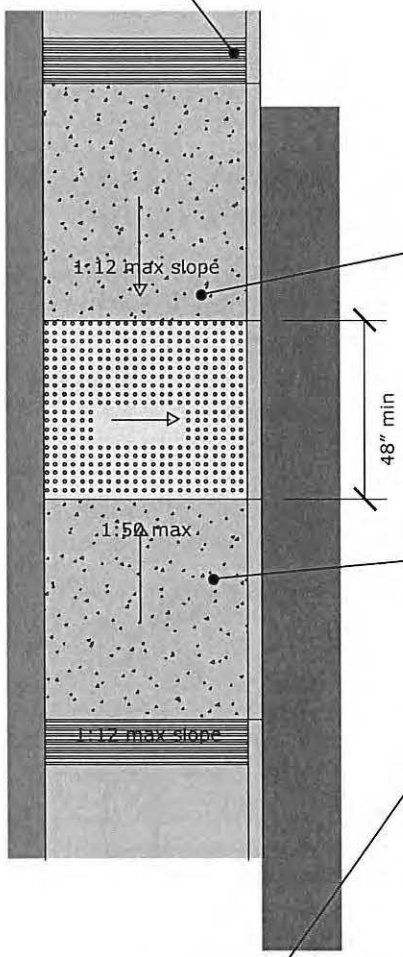

Curb Ramp Slope
1127B.5.3
-1:12 (8.33%) max. slope in direction of travel

Flared Sides Slope
1127B.5.3, *406.3*
-1:10 (10%) max. slope

Flush Transition between Street and Curb Ramp

Adjacent Surface Slopes
1128B, 1127B.5.3, *403.3, 406.2*
-Cross slope of any ramp portion 1:50 (2%) max.
-1:20 (5%) max. slope on adjacent gutters, road surfaces and accessible route(s)

Curb Ramp Slope
1127B.5.3
-1:12 (8.33%) max. slope in direction of travel

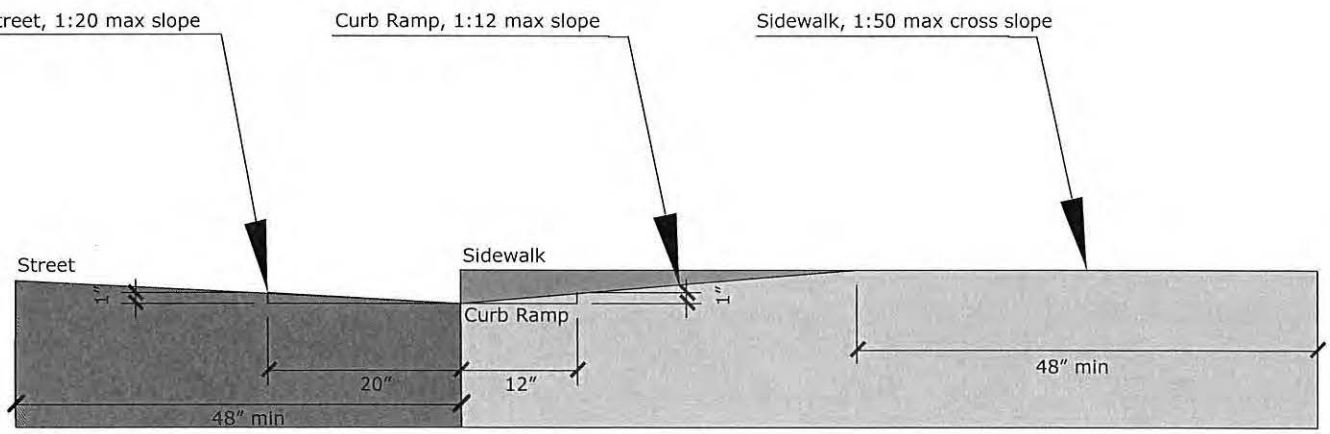

© June 2012 Designing Accessible Communities. All rights reserved.

Detectable Warnings

General*

1127B.5.7, Fig. 11B-23A, *701.1, 705.1, Fig. 705.1*

-Detectable warnings shall be slip-resistant and consist of raised truncated domes
-Shall contrast visually with adjoining surfaces
-Material used to provide contrast shall be integral to the walking surface
-Domes shall be aligned in a rectangular pattern, not offset
-Refer to CCR Title 24, Part 12, Chapters12-11A and B for building and facility access specifications for DSA-AC approved detectable warning products and directional surfaces

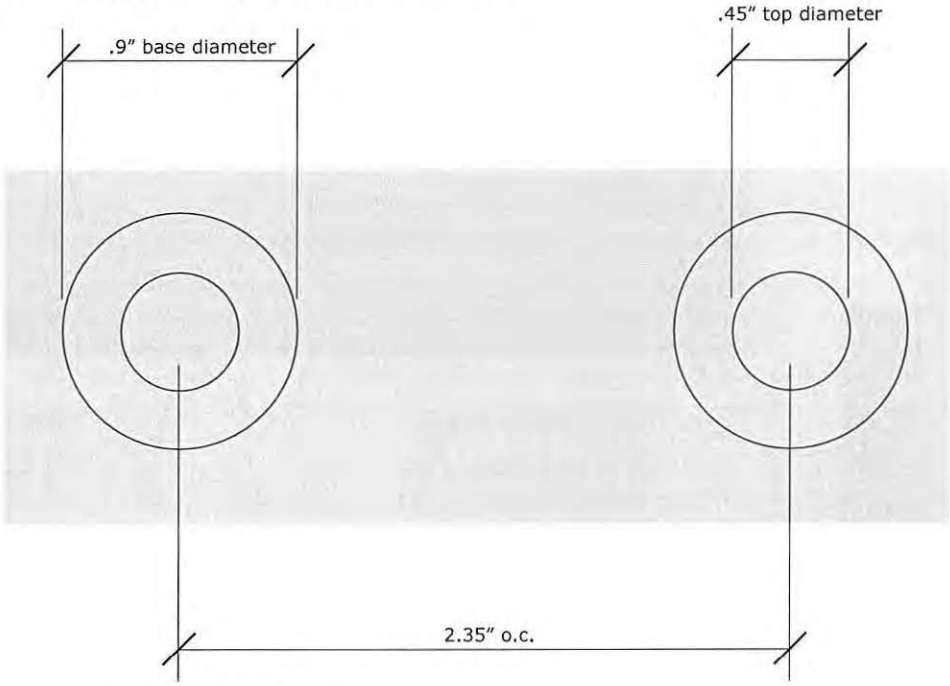

Truncated Domes

1127B.5.7

-Nominal base diameter 0.9", tapering to 0.45" diameter at top
-Nominal height 0.2"

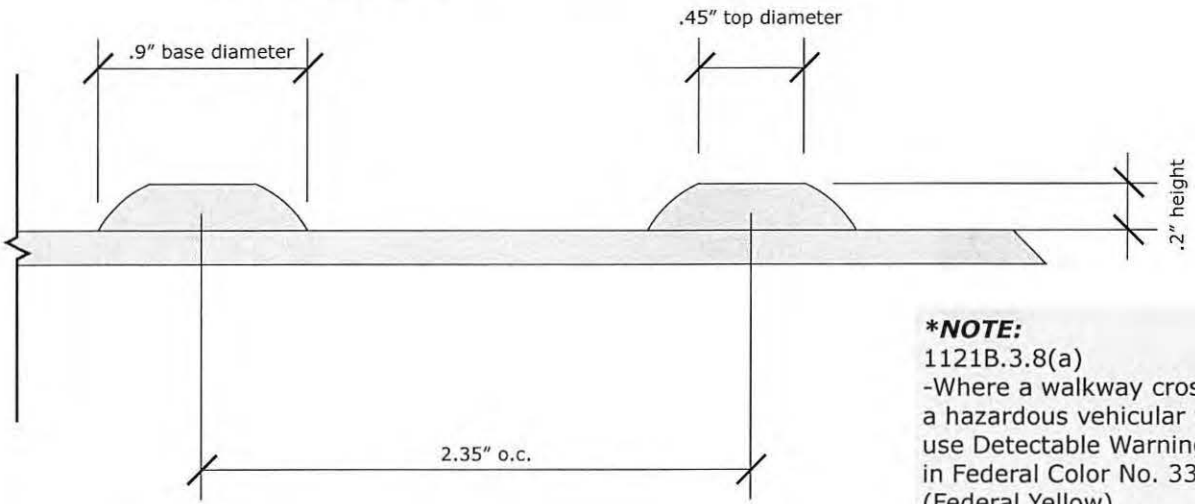

Spacing

1127B.5.7

-Center-to-Center spacing nominal 2.35"

NOTE:

1121B.3.8(a)
-Where a walkway crosses a hazardous vehicular way, use Detectable Warnings in Federal Color No. 33538 (Federal Yellow)
-Determine hazardous vehicular areas by looking at the user base and the vehicular traffic volume where it crosses the pedestrian right-of-way (i.e. place Federal Yellow Detectable Warnings at commercial driveways to shopping centers, etc.)

© June 2012 Designing Accessible Communities. All rights reserved.

RAMPS

General
1133B.5.1
-Any accessible route with a slope greater than 1:20 (5%) is considered a ramp

Landings
1133B.5.4, *405.7*
-Provide Level Landings [less than 1:50 (2%) slope in all directions] at top and bottom of each ramp
-If necessary, provide intermediate landings for each 30" vertical rise and at each change in direction
-Provide positive drainage on ext. ramp landings

Bottom Landing
1133B.5.4, *405.7*
-72" min. length
-Full width of ramp

Intermediate Landing
1133B.5.4, *405.7*
-60" min. length Level Landing
-Full width of ramp run

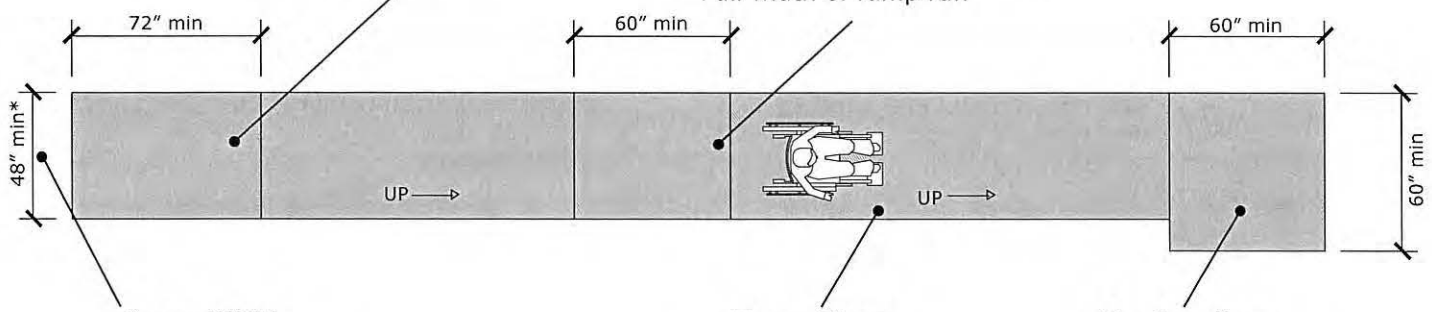

Ramp Width
1133B.5.2
-48" min. clear width
*NOTE: If Occupancy is >300 people, 60" min. clear width

Ramp Slope
1133B.5.3, *405.2*
-Use ***least possible*** slope
-1:12 (8.33%)Max. slope
-30" max. rise for any run
-1:50 (2%) max. cross slope

Top Landing
1133B.5.4, *405.7*
-Min. 60" x 60" Level Landing

Bottom Landing
1133B.5.4, *405.7*
-72" min. length
-Full width of ramp

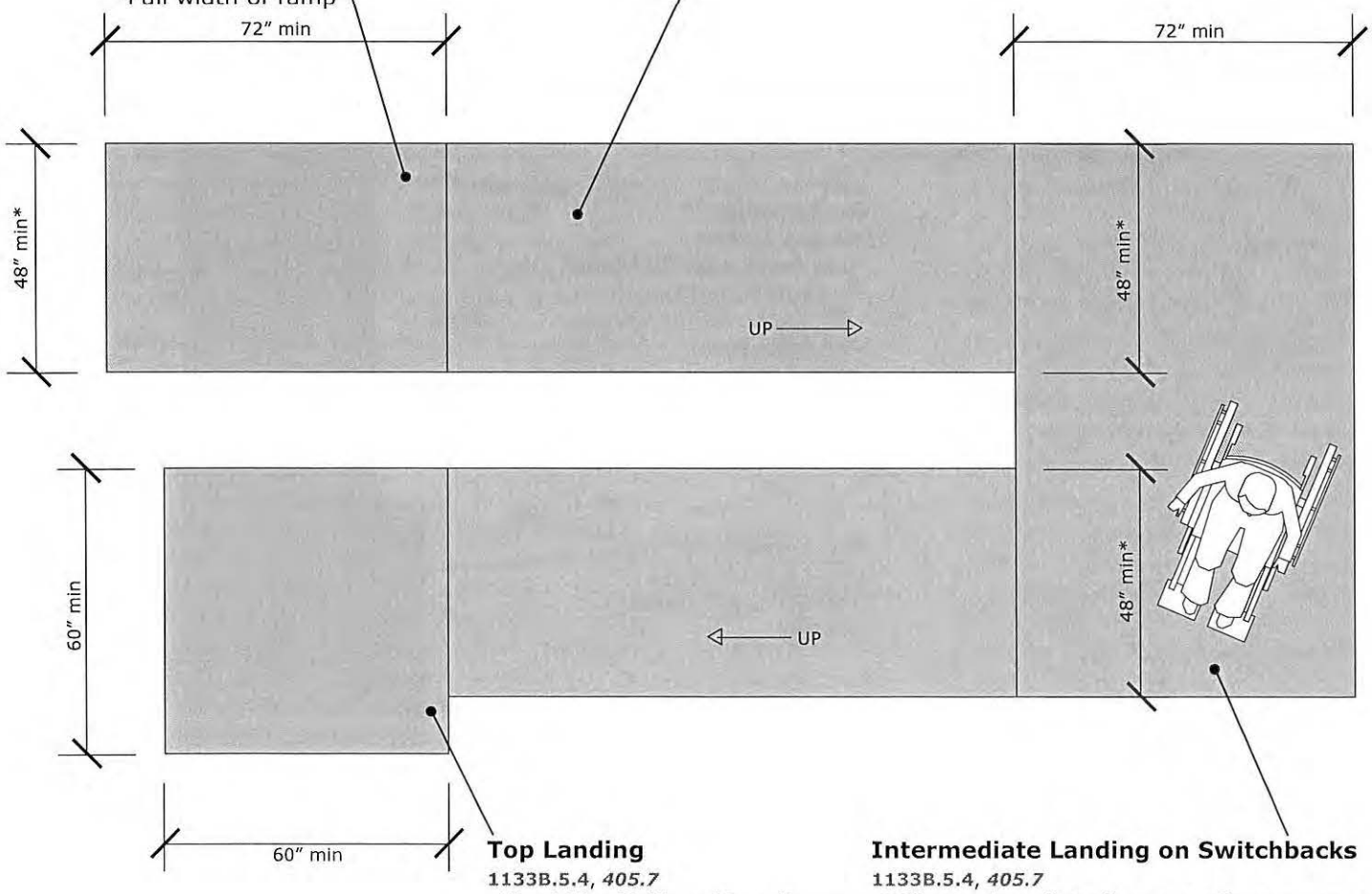

Top Landing
1133B.5.4, *405.7*
-Min 60" x 60" Level Landing

Intermediate Landing on Switchbacks
1133B.5.4, *405.7*
-72" min. length in direction of ramp run at any change of direction greater than 30°

© June 2012 Designing Accessible Communities. All rights reserved.

RAMPS

General
1133B.5.1
-Any accessible route with a slope greater than 1:20 (5%) is considered a ramp

Landings
1133B.5.4, *405.7*
-Provide Level Landings [less than 1:50 (2%) slope in all directions] at top and bottom of each ramp
-If necessary, provide intermediate landings for each 30" vertical rise and at each change in direction
-Provide positive drainage on ext. ramp landings

Intermediate Landing at Change of Direction
1133B.5.4, *405.7*
-72" min. length in direction of ramp run at any change of direction greater than 30 degrees
-72" min. wide
-Level Landing

Bottom Landing
1133B.5.4, *405.7*
-72" min. length Level Landing
-Full width of ramp

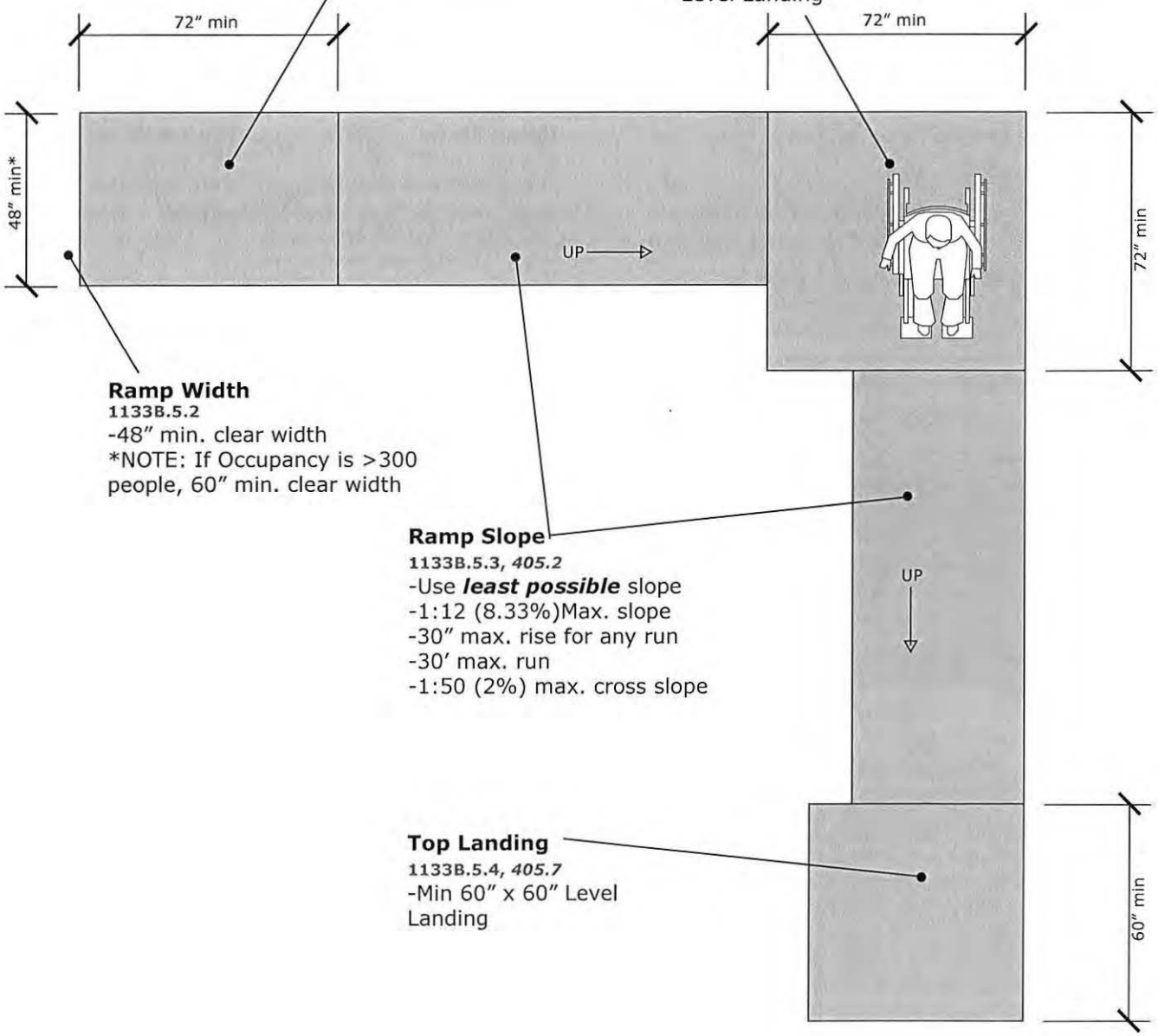

Ramp Width
1133B.5.2
-48" min. clear width
*NOTE: If Occupancy is >300 people, 60" min. clear width

Ramp Slope
1133B.5.3, *405.2*
-Use ***least possible*** slope
-1:12 (8.33%)Max. slope
-30" max. rise for any run
-30' max. run
-1:50 (2%) max. cross slope

Top Landing
1133B.5.4, *405.7*
-Min 60" x 60" Level Landing

© June 2012 Designing Accessible Communities. All rights reserved.

Ramp Handrails

General
1133B.5.5.1
-Handrails required on all ramps, except at door landings where ramp rise is <6"
-Continuous on both side of ramp

Ramp Width
1133B.5.2
-48" min. clear width
*NOTE: If Occupancy is >300 people, 60" min. clear width

Clearance at Door
1133B.2.4.3, *404.2.4*
-24" min. at latch side of ext. door

Handrails
1133B.5.5.1
-May extend into required clear width 3-1/2" on each side

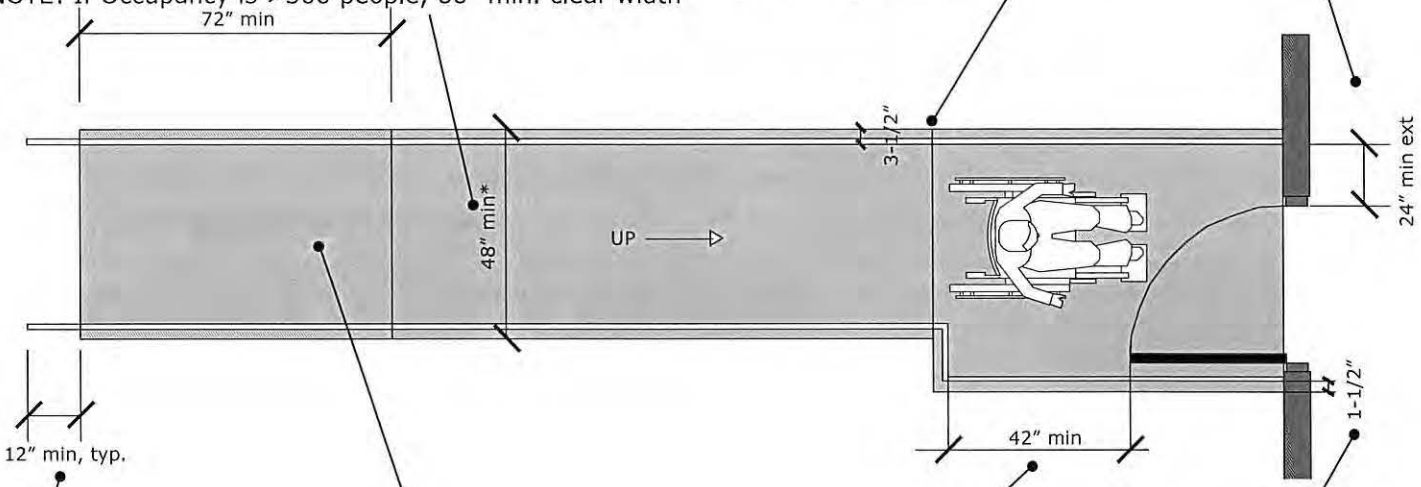

Clear Space at Door on Landing
1133B.5.4.4
-42" min. between fully open door and railing

Distance to Wall
1133B.5.5.1
-1-1/2" between handrail and wall

Railing Extension
1133B.5.5.1
-12" min. length parallel to floor before turning down or to the side

Bottom Landing
1133B.5.2, 1133B.5.4.2
-72" min. length
-Full width of ramp

Top Landing
1133B.5.2, 1133B.5.4.2, ***405.7***
-60" min. length
-Full width of ramp (Min. 48" wide)

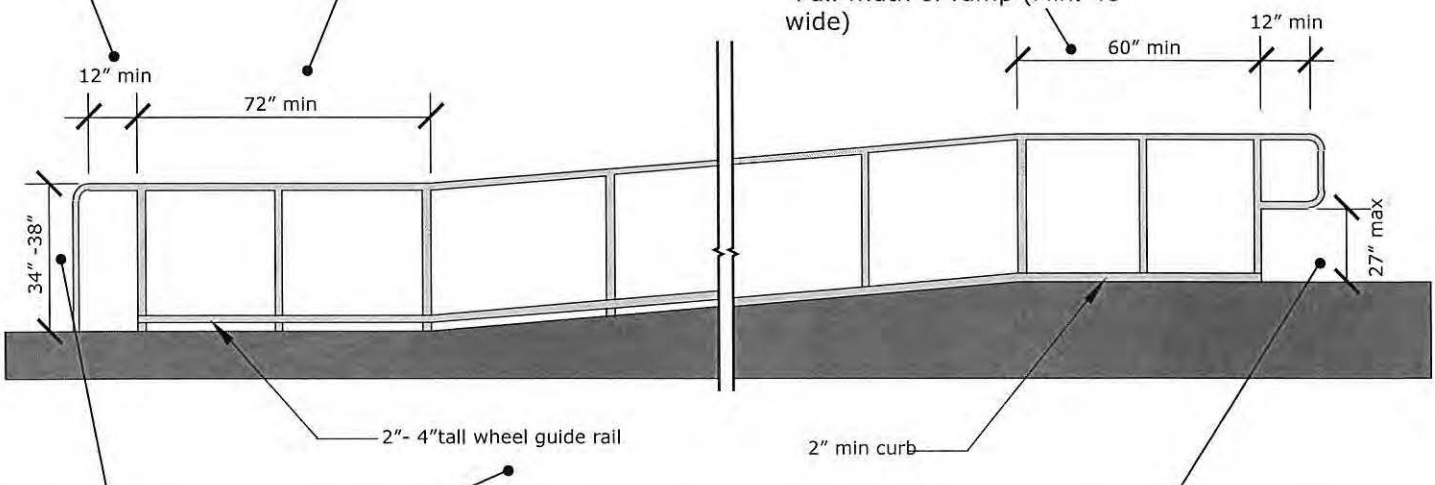

Handrail Height
1133B.5.5.1
-34" min., 38" max.
-Consistent along entire ramp run

Wheel Guide Rail *OR* Curb
1133B.5.4.8
-2" to 4" tall wheel guide rail, centered at 2" to 4" AFF
OR
Curb at 2" min. height AFF
-Full length of ramp
-When handrails are not wall-mounted
-Must provide smooth edge along inside of ramp

Handrail Return
1133B.5.5.1
-12" min. parallel to floor
-27" max to lower return rail
-Not needed if a compliant handrail extends along a level landing

© June 2012 Designing Accessible Communities. All rights reserved.

HANDRAILS

Handrail Grips (for ramps and stairs)
1133B.4.2.5-6, *505.5, 505.7*
-Grip portion 1-1/4" to 1-1/2" in cross section (or equivalent gripping surface) measured to outer dimension
-1-1/2" space between handrail and wall
-Smooth wall surface behind handrails

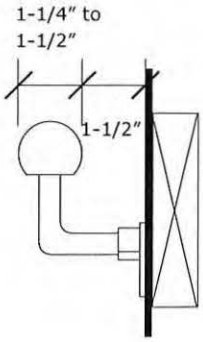

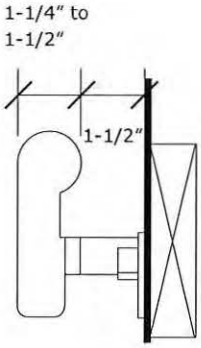

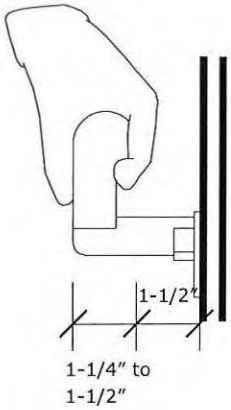

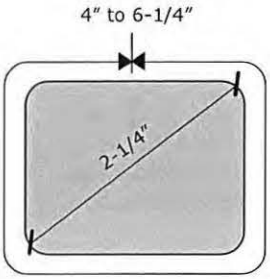

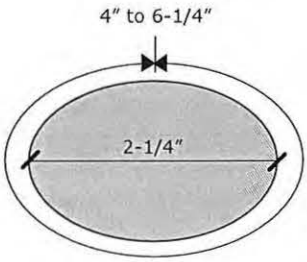

Non-Circular Handrail Grips
505.7.2
-2-1/4" max. cross section
-4" min. to 6-1/4" max. perimeter
(***Note:*** This was proposed as a part of the next CBC Code Cycle at the 5/21/12 Stakeholder Forum, but is not yet part of CBC, Title 24, as of this writing.)

Handrail
1133B.4.1.1, 1133B.4.2.1, *505.2, 505.4*
-Mounted 34" - 38" above tread surface
-Return to wall, post, or floor at ends
-On both sides of stairs
-Continuous along both sides

12"
34" -38"
27" max
Tread Width
34" -38"
12"
Tread Width
34" -38"

Top Extension
1133B.4.2.2, *505.10*
-12" past nosing on top tread
-Parallel with floor
-Return to floor, wall, or handrail

Bottom Extension
1133B.4.2.2, *505.10*
-Handrail extends at same slope 1 Tread Width past bottom stair
-12" horizontal extension past that, parallel with floor
-Return to floor, wall, or handrail

© June 2012 Designing Accessible Communities. All rights reserved.

Stairs

Top Extension
1133B.4.2.2, *505.10*
-12" past nosing on top tread
-Parallel with floor
-Return to floor, wall, or handrail
-Exceptions:
-at a change in direction, continue handrail
-in existing buildings where an extension would cause a dangerous condition

Cane Detectable Extensions
1133B.8.6, *307.4*
-Where the vertical clearance is less than 80", provide a barrier to warn people with blindness or visual impairments
-The leading edge of the barrier or guardrail shall be 27" max. above the finished floor

Handrails
1133B.4.1.1, 1133B.4.2.1, *505.2, 505.4*
-34" to 38" mounting height, consistent along each flight of stairs
-Continuous on both sides of stairs
-Return to wall, post, or floor at ends

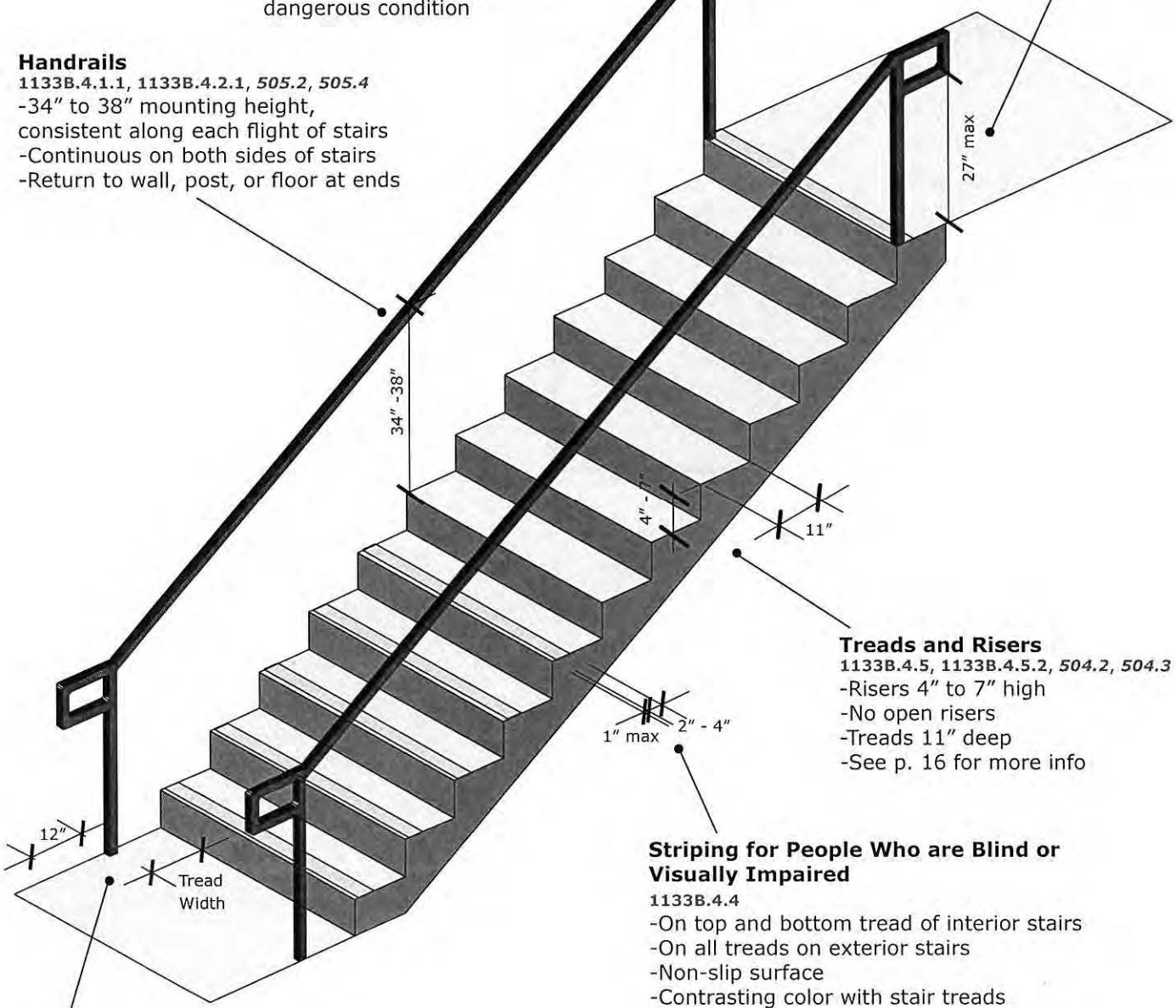

Treads and Risers
1133B.4.5, 1133B.4.5.2, *504.2, 504.3*
-Risers 4" to 7" high
-No open risers
-Treads 11" deep
-See p. 16 for more info

Striping for People Who are Blind or Visually Impaired
1133B.4.4
-On top and bottom tread of interior stairs
-On all treads on exterior stairs
-Non-slip surface
-Contrasting color with stair treads
-2" to 4" wide
-Set 1" max. back from front edge of tread
-Full width of step

Bottom Extension
1133B.4.2.2, *505.10*
-Handrail extends at same slope 1 Tread Width past bottom stair
-12" horizontal extension past that, parallel with floor
-Return to floor, wall, or handrail

© June 2012 Designing Accessible Communities. All rights reserved.

STAIRS

Nosings
1133B.4.5.3, *504.5*
-1/2" max. radius
-1/2" max. bevel
OR
-Projected 1-1/4" max. past back of tread below, with underside curved or beveled at 30° max.

Risers
1133B.4.5, 1133B.4.5.2, *504.2, 504.3*
-Open risers NOT permitted
-4" to 7" high
-Vertical or 30 degrees max.
-Consistent through entire flight of stairs

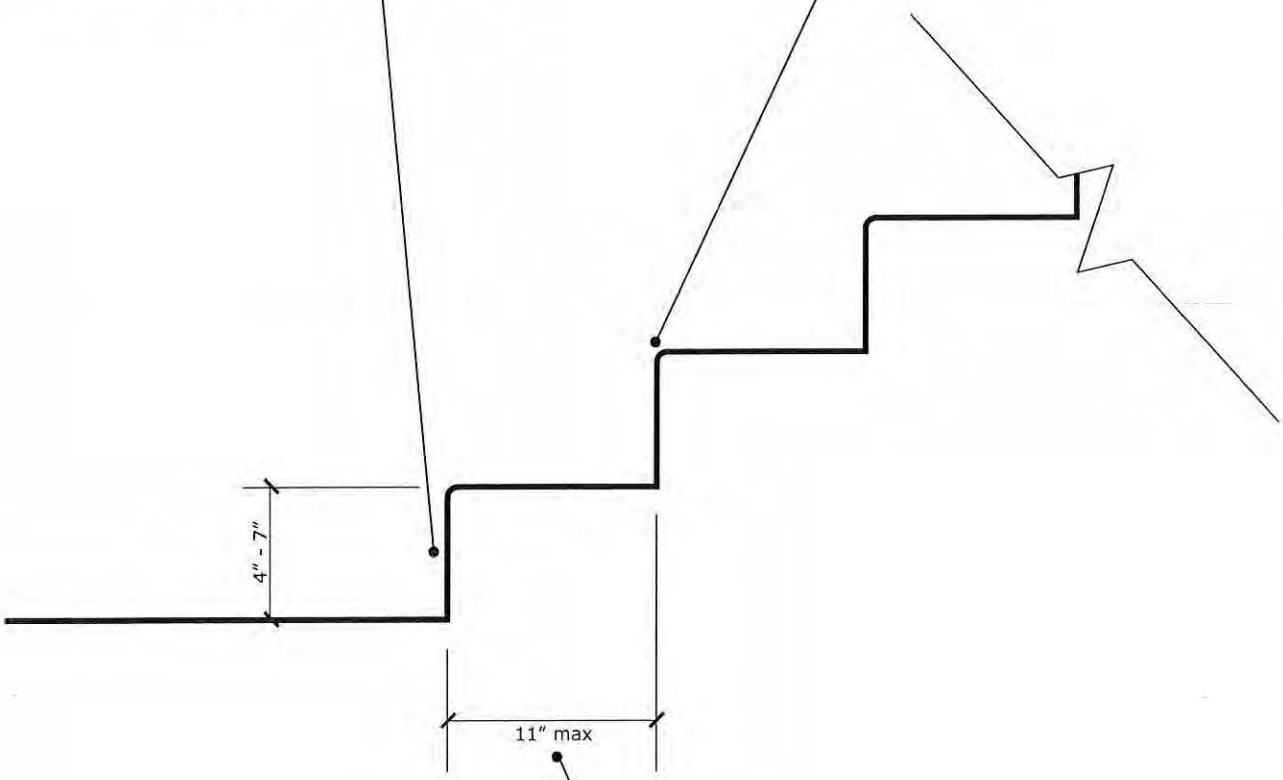

Treads
1133B.4.5, *504.2*
-11" max. depth from riser to riser
-Horizontal
-Same through entire flight of stairs
-Front may extend 1-1/4" max. past back edge of tread below

© June 2012 Designing Accessible Communities. All rights reserved.

Doors

General
1133B.2.2, 1133B.2.3.3
-Door size shall be min. 36" wide by min. 6'8" tall
-Mounted so that when opened 90 degrees, clear width is 32" min.
-Revolving doors are not permitted as part of an accessible route

Door Opening Force
1133B.2.5, *404.2.9, 404.2.8*
-Max. 5 lbs. of force to open all interior and exterior doors
->5 lbs. may be used to ensure a fire door closes, but not >15 lbs. Use lowest pressure possible
-If door has a closer, it must take 5 seconds min. to swing from 90 degrees open to closed
-Door must be maintained to keep a compliant opening force
-If a compliant door opening force is not achievable, a power operator may be used, with a battery backup and a regular service contract, for exterior doors only
1133B.2.5, Exception 2(b)

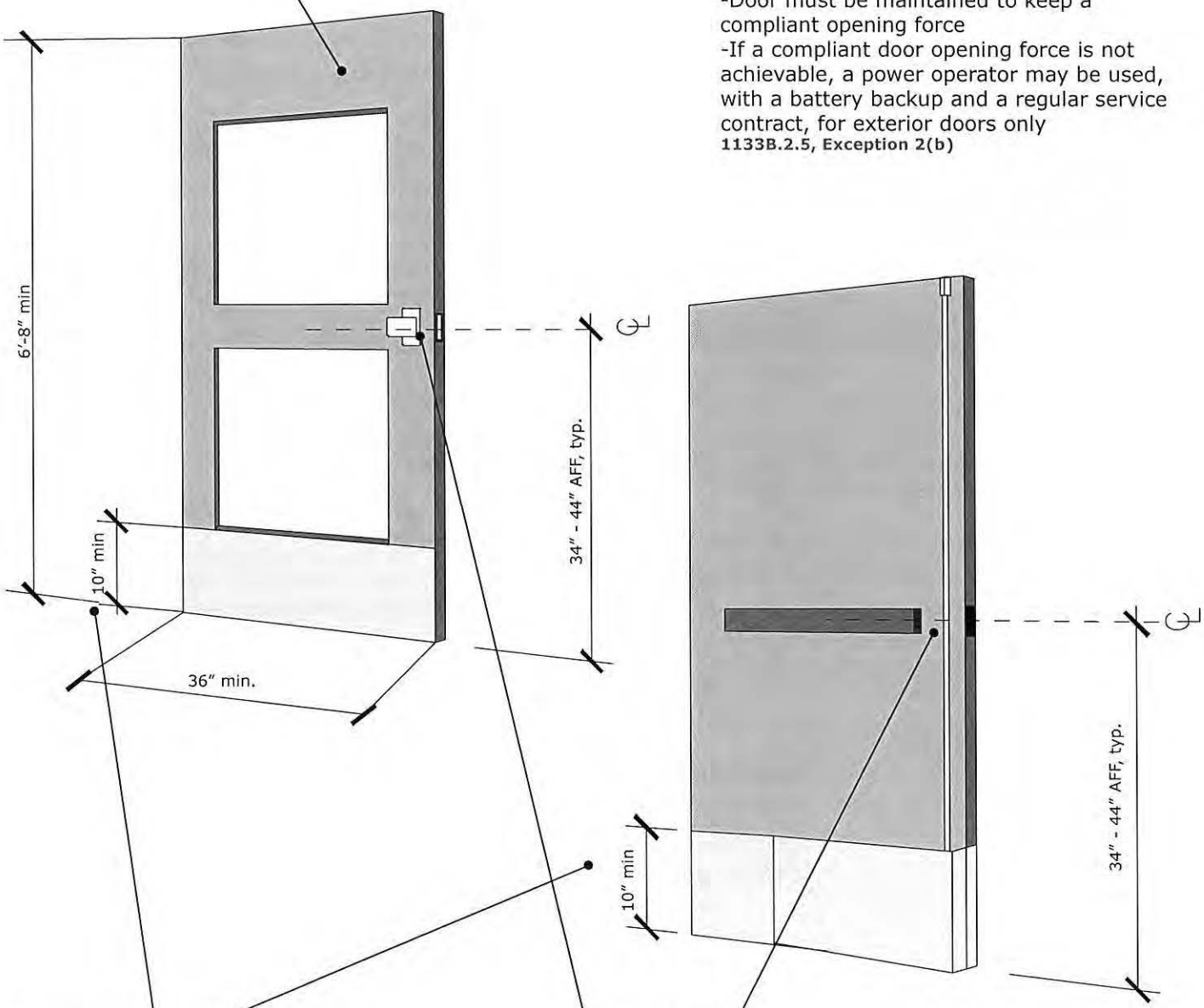

Kickplate
1133B.2.6, *404.2.10*
-Bottom 10" min. from floor on all doors (except automatic and sliding doors) must be a smooth, uninterrupted surface on push side
-Allows door to be opened by a wheelchair footrest
-If infilling an existing door, make sure surfaces are flush so as not to create a trap or hazardous condition
NOTE: Devices for holding a door open may be installed on the pull side of a door

Door Hardware
1133B.2.5.2, *309.4*
-Door hardware located between 34" and 44" above finished floor
-Operable with one hand, does not require tight grasping, pinching or twisting of the wrist to operate
-Lever-type hardware, panic bars, push-pull activating bars, and U-shaped handles are acceptable
-If there are actuator bars that run the height of the door, the bottom 10" must be protected by a kickplate that protrudes no more than 4" max from the face of the door, and does not create a trap or hazardous condition

© June 2012 Designing Accessible Communities. All rights reserved.

Doors & Thresholds

Door Opening
1133B.2.2
-32" min. clear when door is open 90°

Pull Side Clearance
1133B.2.4.3
-18" min. clearance on strike side for interior doors
-24" min. clearance on strike side for exterior doors
-24" min. preferred

Maneuvering Clearances at Doors
1133B.2.4.2
-60" min. clearance on pull side of door
-48" min. clearance on push side of door

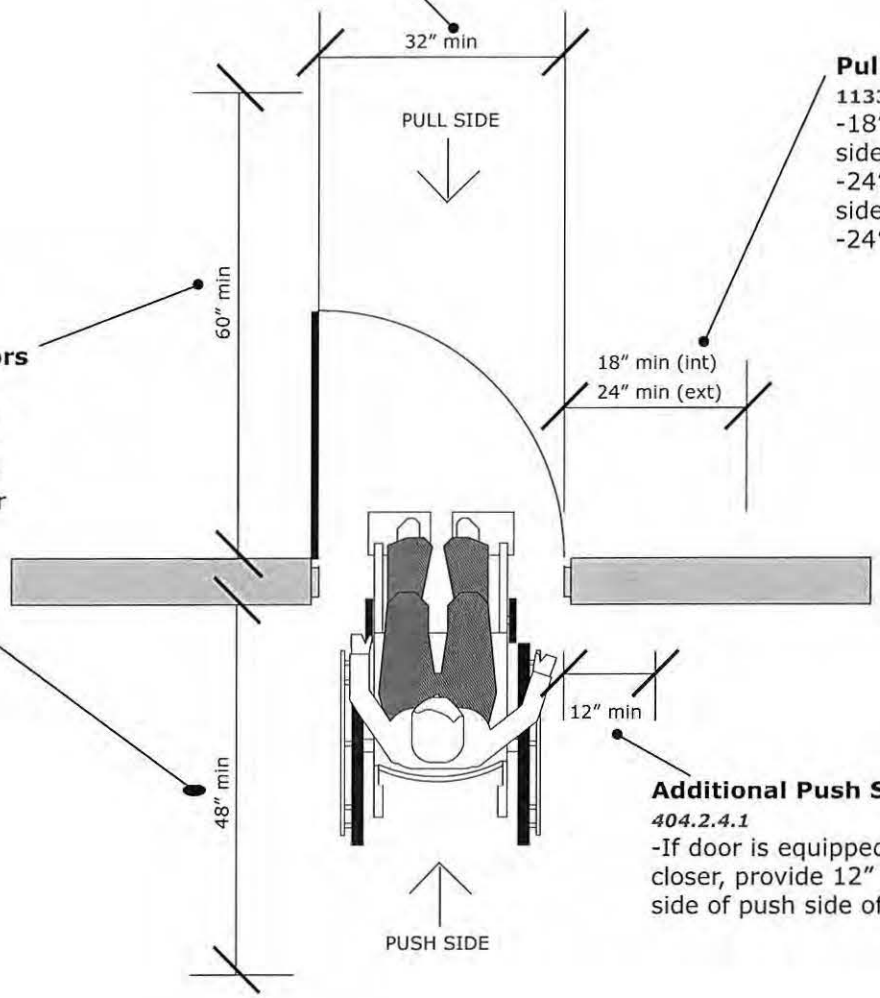

Additional Push Side Clearance
404.2.4.1
-If door is equipped with both a latch and closer, provide 12" min. clearance on strike side of push side of door

Threshold
1133B.2.4.1, *404.2.5*
-1/4" max. height AFF without bevel
-1/2" max. height AFF with 1:2 sloped bevel between 1/4" and 1/2" height

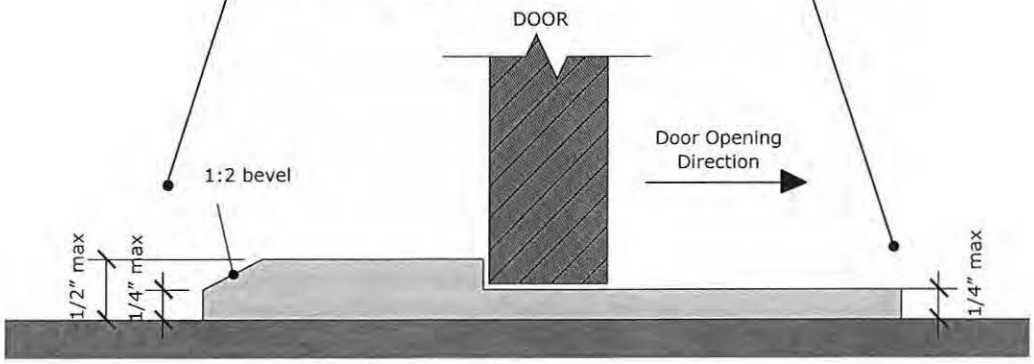

© June 2012 Designing Accessible Communities. All rights reserved.

Doors & Vestibules

Clear Width
1133B.3.1
-44″ min. clear width of corridor
-32″ clear opening at doorway with door open 90°

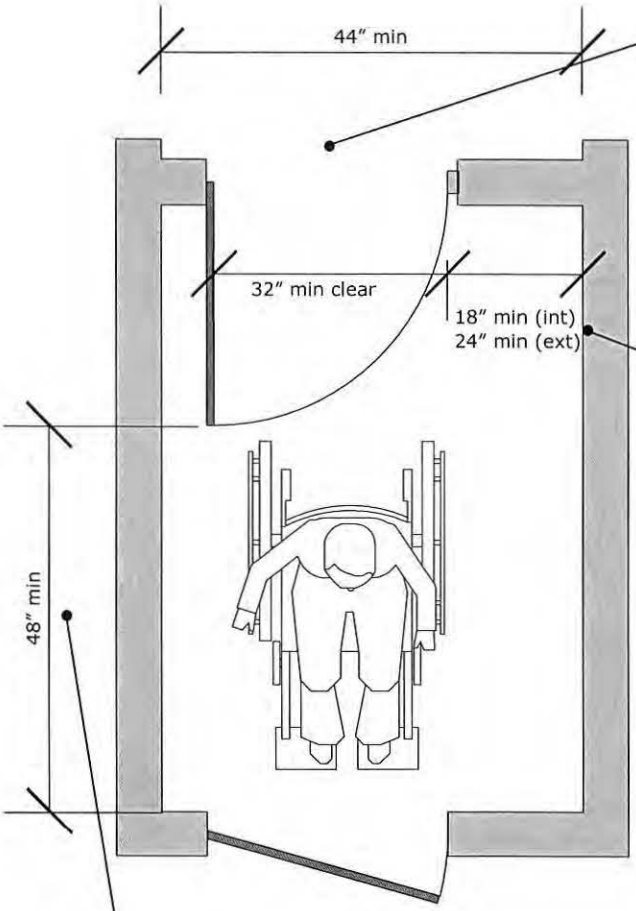

Pull Side Approach
1133B.2.4.3
-18″ min. clearance on strike side for interior door
-24″ min. clearance on strike side for exterior door
-***Best Practice:*** 24″ is preferred

Space Between Doors
1133B.2.4.4, *404.2.6*
-48″ min. clear space between doors (when door swinging into space is open 90°)
-Doors shall swing in same direction or outward from vestibule

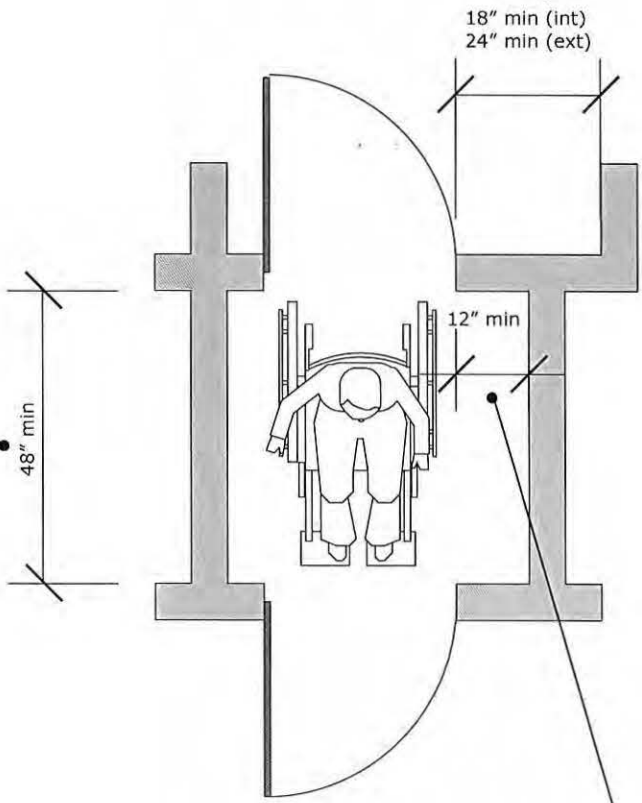

Push Side Approach
404.2.4.1
-12″ min. clearance on strike side

© June 2012 Designing Accessible Communities. All rights reserved.

Corridors

Corridors (Longer than 200 ft.)
1133B.3.2
-60″ min. clear width

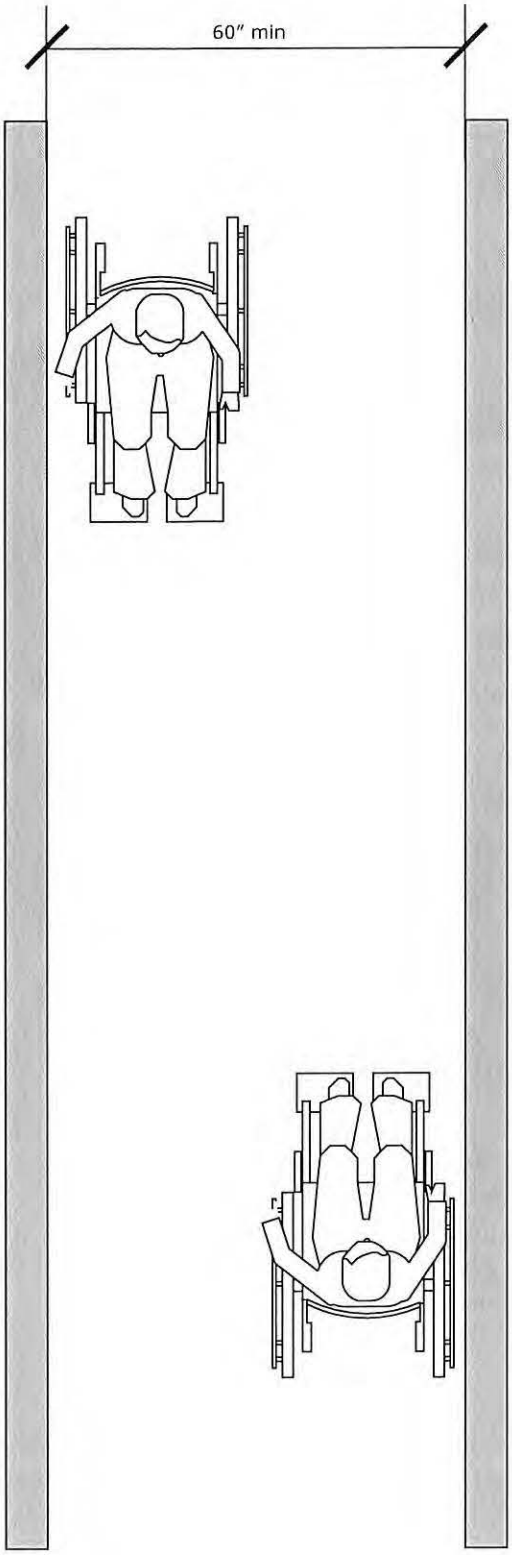

Corridors (Less than 200 ft.)
1133B.3.1
-44″ min. clear width
-36″ min. clear width for buildings with occupancy loads <10
-***Best Practice:*** Even in occupancy loads of < 10, use 44″ min. clear hall width because of difficulty for a person in a wheelchair making a 90° turn in narrower halls

Turn Around
1118B.2, *304.3.1*
-If <60″ min. wide, provide a 60″ min. diameter circle for turning around every 200 ft. min.

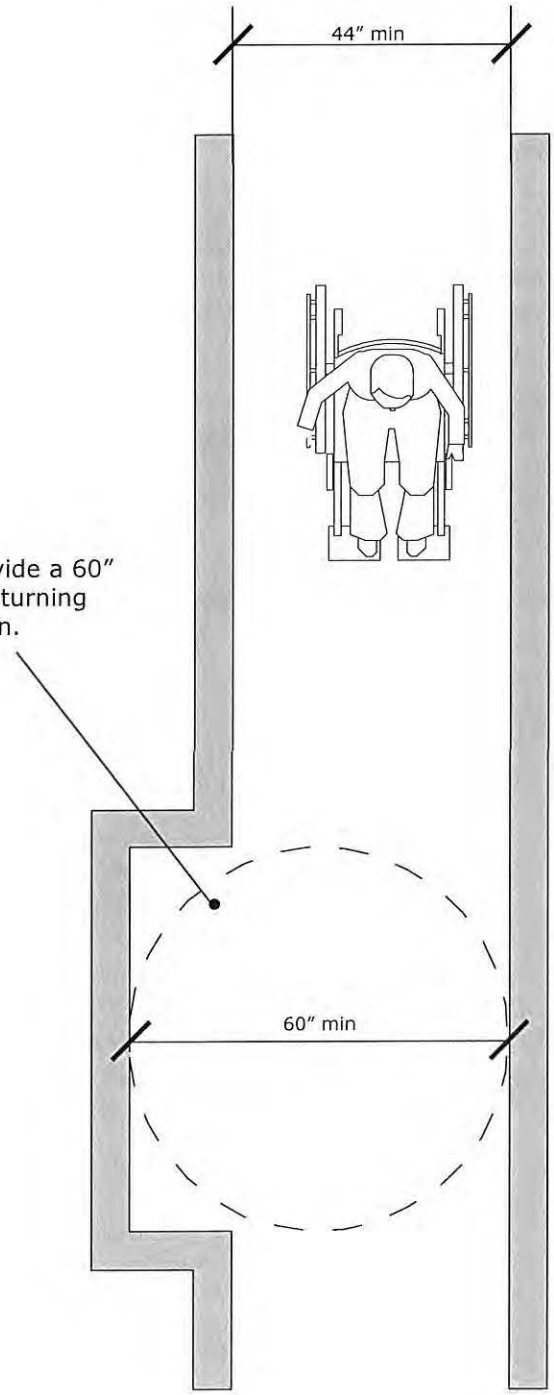

© June 2012 Designing Accessible Communities. All rights reserved.

Fire Alarm Pull Stations

Non-Accessible **Fire Alarm Pull Station**

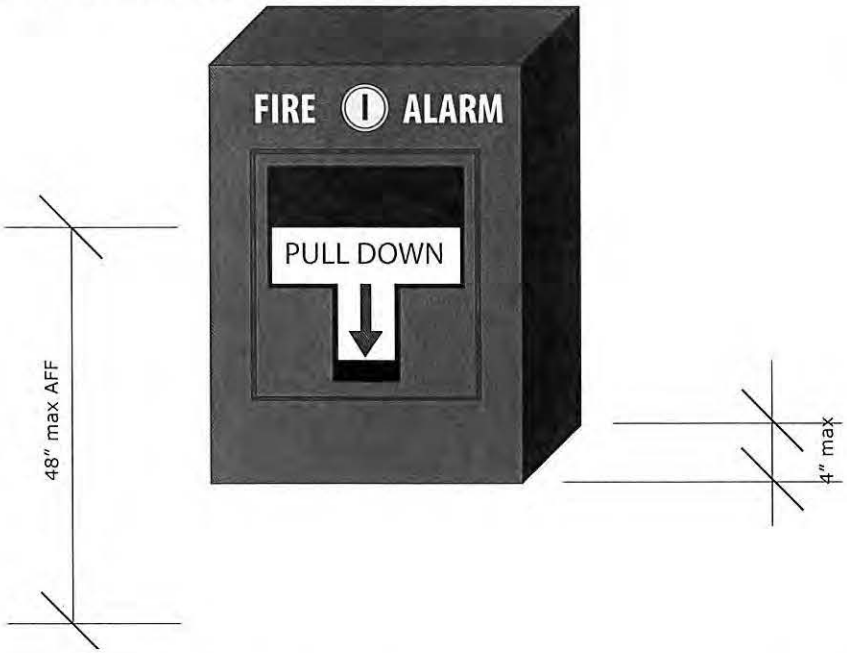

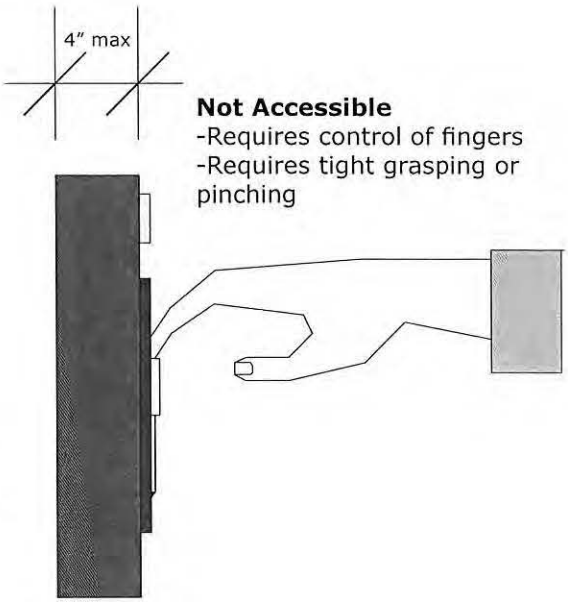

Not Accessible
-Requires control of fingers
-Requires tight grasping or pinching

Mounting Height
1118B.5, 1118B.6, *308.2.1, 308.3.1*
-48" max. AFF to operable parts
-15" min. AFF

Operable Parts
1117B.6.2, 1117B.6.4, *309.2, 309.4*
-Operable with one hand
-No tight grasping, pinching, or twisting of the wrist
-5 lbs. max. force to activate operable parts
-30" x 48" min. clear floor space adjacent to fire alarm pull station

Accessible Fire Alarm Pull Station
-The operable lever arm is replaced with one that can be easily operated with a closed fist, as shown at right

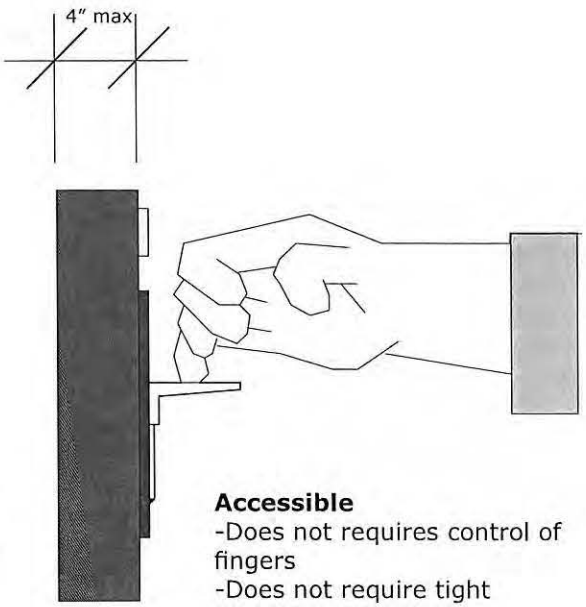

Accessible
-Does not requires control of fingers
-Does not require tight grasping or pinching

Note: Accessible fire alarm pull stations and retrofit kits are available from Simplex Grinell.
#4099-9020 NO GRIP Addressable Single Action Manual Pull Station
#4099-9805 Actuator Retrofit Kit

National Fire Alarm Code Requirements (NFPA 72)
-Located in normal path of exit
-At least one station on each floor
-Not more than 200 ft. to nearest station from any point in the building

© June 2012 Designing Accessible Communities. All rights reserved.

Elevators

Floor Indication
1116B.1.14, *407.2.3.1*
-On both door jambs on each floor
-Indicate floor using raised characters 2" high and Braille
-Main entry level indicated by a raised star, raised number, and "Main" in Braille
-60" min. AFF to CL

Hall Lantern
1116B.1.13, *407.2.2*
-Visual and audible signal at each elevator entrance
-Visual signal 2-1/2" x 2-1/2" min. and visible from near call buttons
-Audible signal sounds once for "up" and twice for "down," or announce verbally
-72" min. AFF to CL
-Audible signal for each floor passed

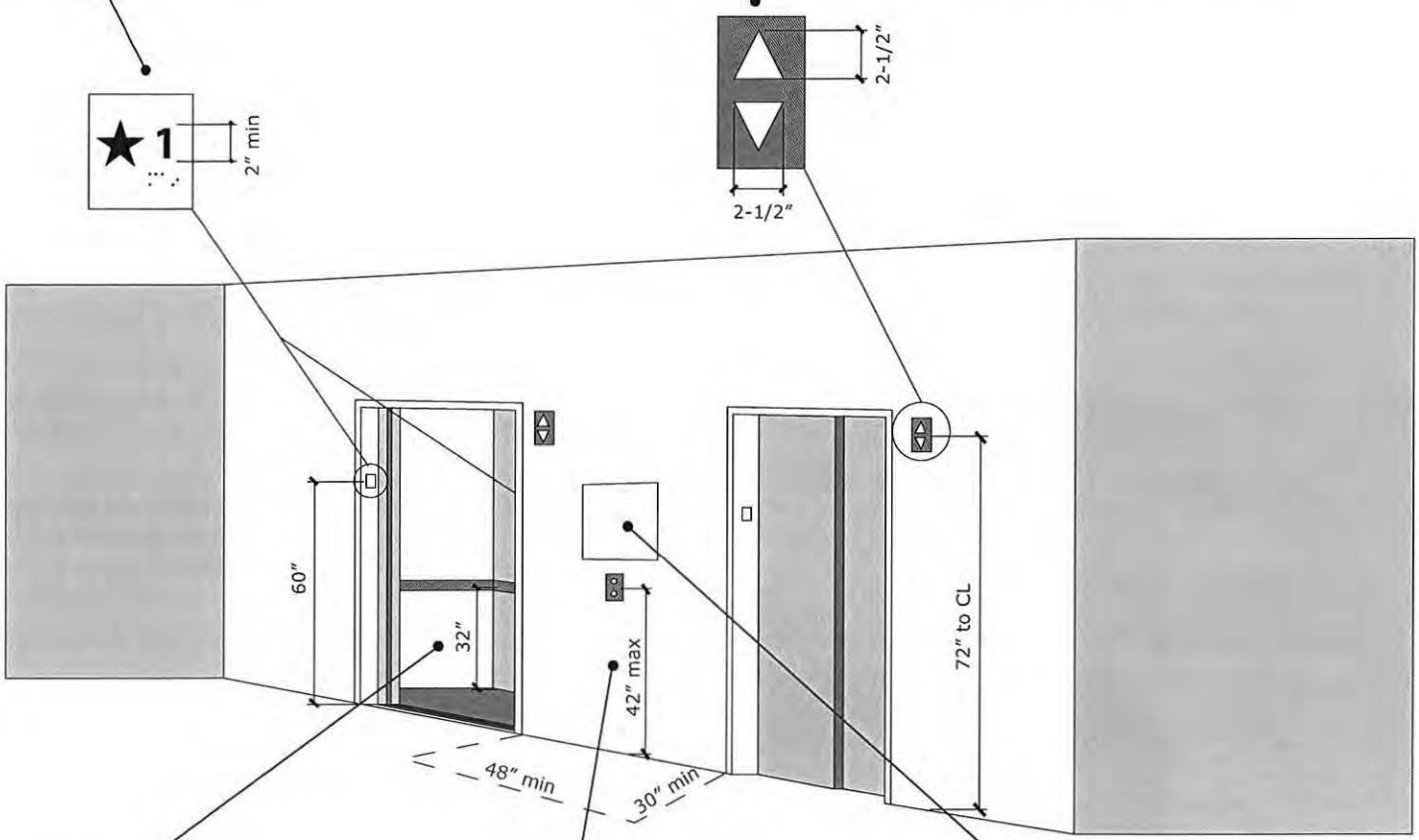

Handrail
1116B.1.11
-Provide on one wall of elevator car, prefer rear wall
-1-1/2" from wall surface
-32" AFF

Call Buttons
1116B.1.10, *407.2.1*
-42" AFF to CL of hall call buttons
-Buttons 3/4" min. in smallest dimension, raised 1/8"
-Button designating "up" on top, "down" on bottom
-Internally illuminated white over entire surface of buttons
-***Best Practice:*** Leave a 30" x 48" min. clear floor space in front of the hall call buttons for people who use wheelchairs, other mobility devices, or service dogs

Tactile Emergency Evacuation Sign
-See p. 26 for more info

Door Protective Re-opening Device
1116B.1.5, *407.3.3*
-Capable of sensing an object or person in path of closing door at 5" and 29" AFF
-Requires no contact
-Doors re-open for min. 20 seconds before closing

Destination Based Elevator Systems
-***Best Practice:*** Do not use destination based elevator systems that do not provide accessibility for all people, including those with visual or cognitive disabilities
-See City of San Francisco guidelines:
http://sfdbi.org/Modules/ShowDocument.aspx?documentid=338 or call the Department of Building Inspection at (415) 558-6088
or contact Thomas Fessler, Building Inspector, City of San Francisco, Access Division at thomas.fessler@sfgov.org or (415) 575-6923

© June 2012 Designing Accessible Communities. All rights reserved.

Elevators

Door Protective Re-opening Device
1116B.1.5, *407.3.3*
-Capable of sensing an object or person in path of closing door at 5″ and 29″ AFF
-Requires no contact
-Doors re-open for min. 20 seconds before closing

Handrail
1116B.1.11
-Provide on one wall of elevator car, rear wall preferred
-1-1/2″ from wall surface
-32″ AFF

Car Depth
1116B.1.8, *407.4.1*
-51″ min. from rear wall to front wall
-54″ min. from rear wall to door

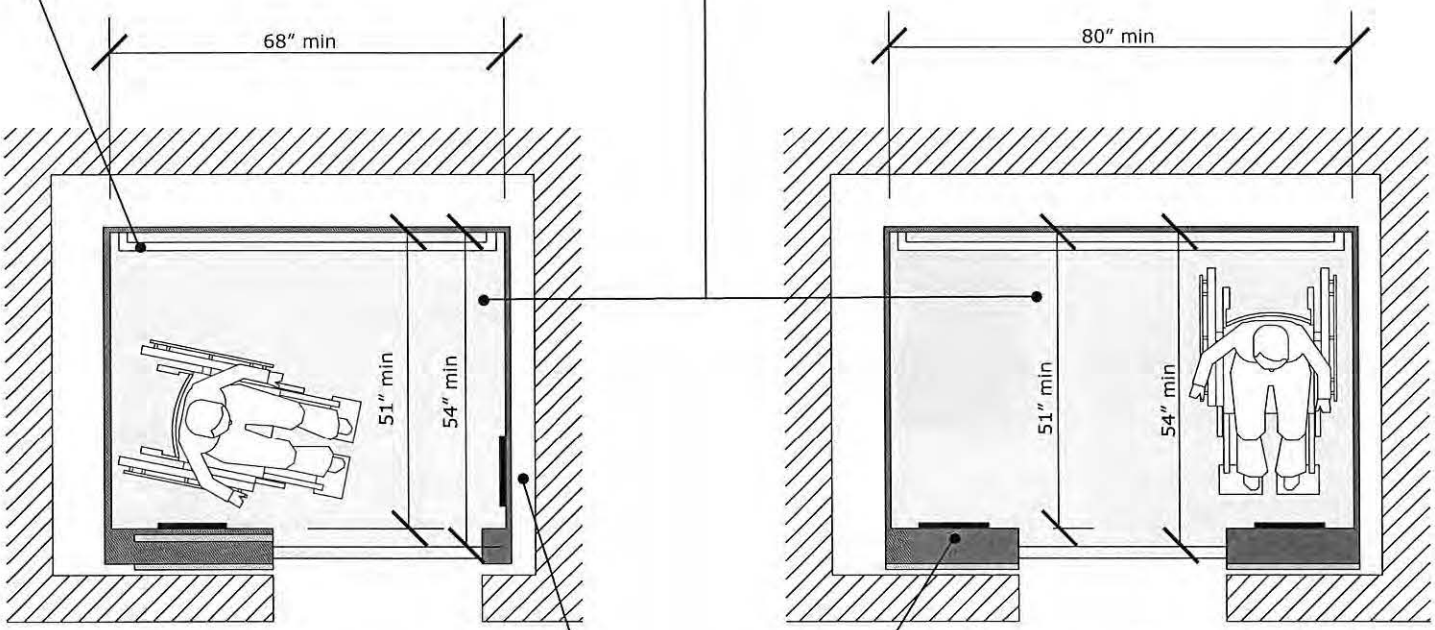

Side Door Car
1116B.1.4, 1116B.1.8, *407.4.1*
-Door 36″ min. wide
-Car 68″ min. wide

Controls Location
1116B.1.8
-Front wall next to door
OR
-In side opening cars, on side wall adjacent to door

Centered Door Car
1116B.1.8, *407.4.1*
-Door 42″ min. wide
-Car 80″ min. wide

Destination Based Elevator Systems
-***Best Practice:*** Do not use destination based elevator systems that do not provide accessibility for all people, including those with visual or cognitive disabilities
-See City of San Francisco guidelines:
http://sfdbi.org/Modules/ShowDocument.aspx?documentid=338 or call the Department of Building Inspection at (415) 558-6088
or contact Thomas Fessler, Building Inspector, City of San Francisco, Access Division at thomas.fessler@sfgov.org or (415) 575-6923

© June 2012 Designing Accessible Communities. All rights reserved.

Elevator Controls

Characters
1116B.1.9
-5/8" min. high
-Raised
-Immediately to the left of buttons
-Braille directly below
-White on black background

Button Size
1116B.1.9, *407.4.6*
-3/4" min.
-Raised 1/8"

Spacing
1116B.1.9
-3/8" min. between buttons and nearest tactile object

Mounting Height
1116B.1.8
-48" max. AFF to CL of highest button

Emergency Buttons
407.4.6
-2'11" min. AFF to CL

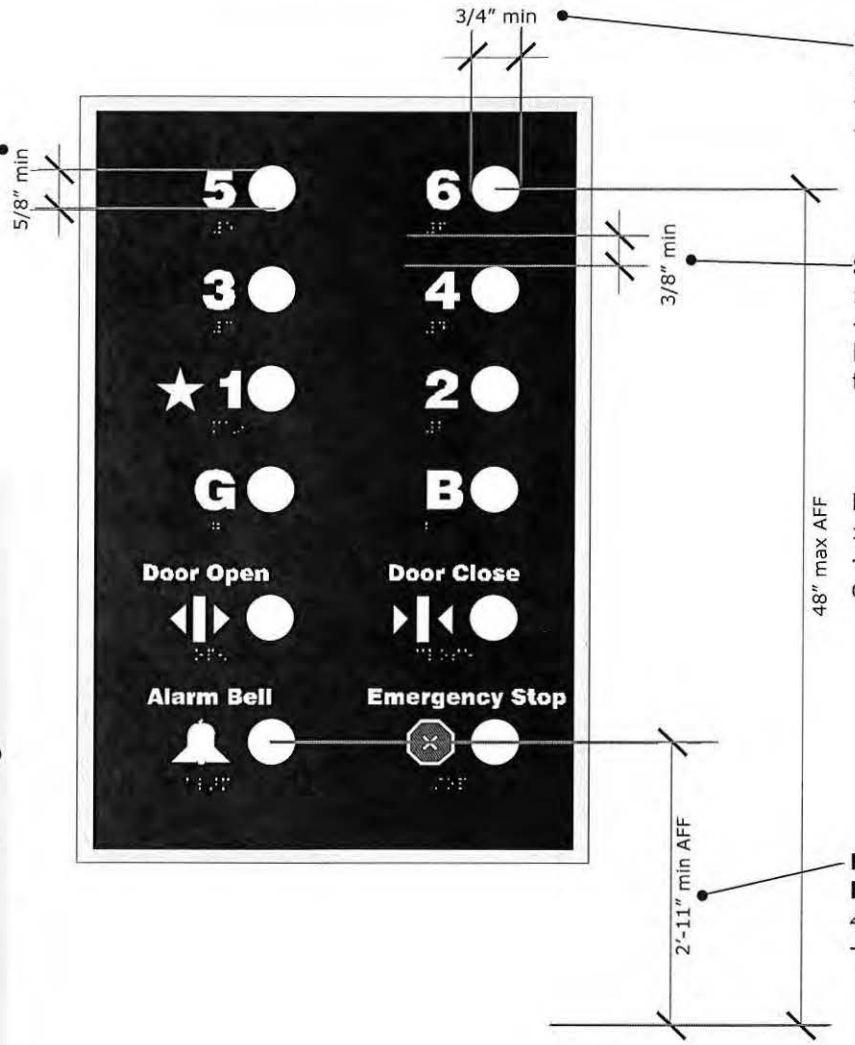

Destination Based Elevator Systems
-***Best Practice:*** Do not use destination based elevator systems that do not provide accessibility for all people, including those with visual or cognitive disabilities
-See City of San Francisco guidelines: http://sfdbi.org/Modules/ShowDocument.aspx?documentid=338 or call the Department of Building Inspection at (415) 558-6088 or contact Thomas Fessler, Building Inspector, City of San Francisco, Access Division at thomas.fessler@sfgov.org or (415) 575-6923

Emergency Phone
-When phone is housed in an enclosure or cabinet, ensure that opening mechanism does not require tight grasping, pinching, or twisting
-***Best Practice:*** A loop that can be used with one closed fist or a push-to-open type door is recommended

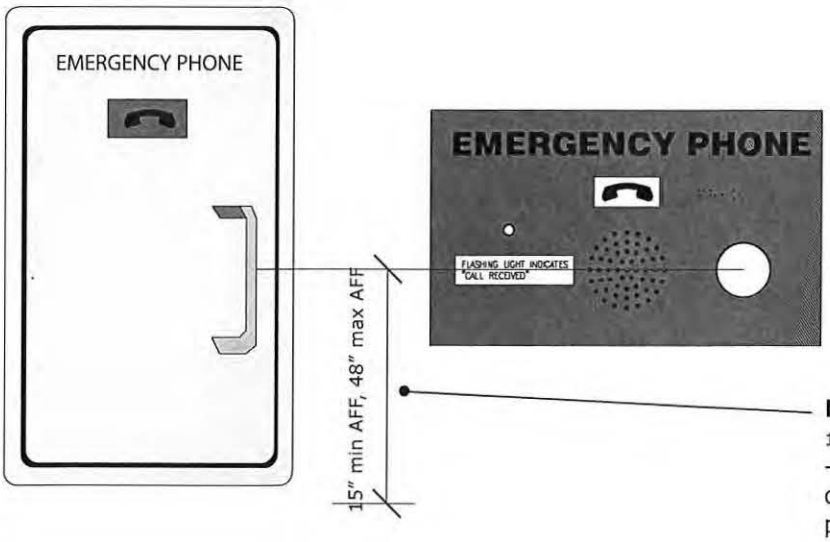

Mounting Height
1116B.1.8
-48" max. AFF to CL of highest operable part
-15" min. AFF

© June 2012 Designing Accessible Communities. All rights reserved.

Wheelchair Lifts

Landings
1116B.2.3
-60″ x 60″ level landings at bottom and top of lift

Platform
410.3
-48″ x 32″ min. platform

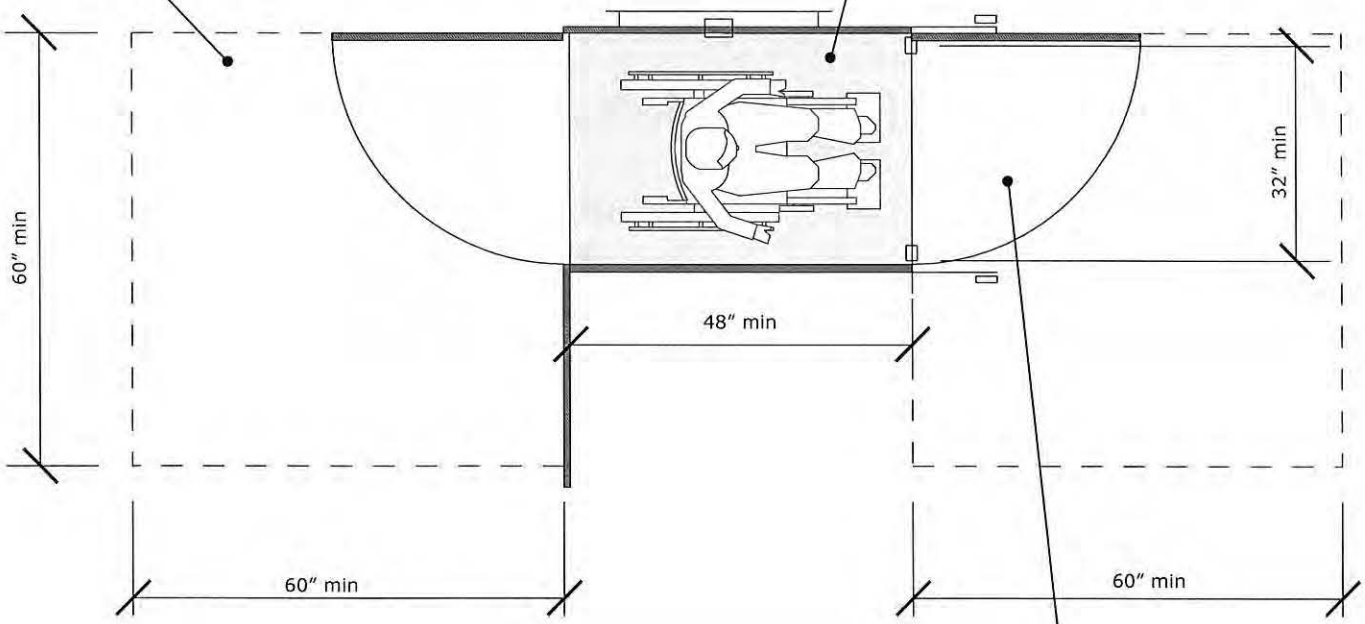

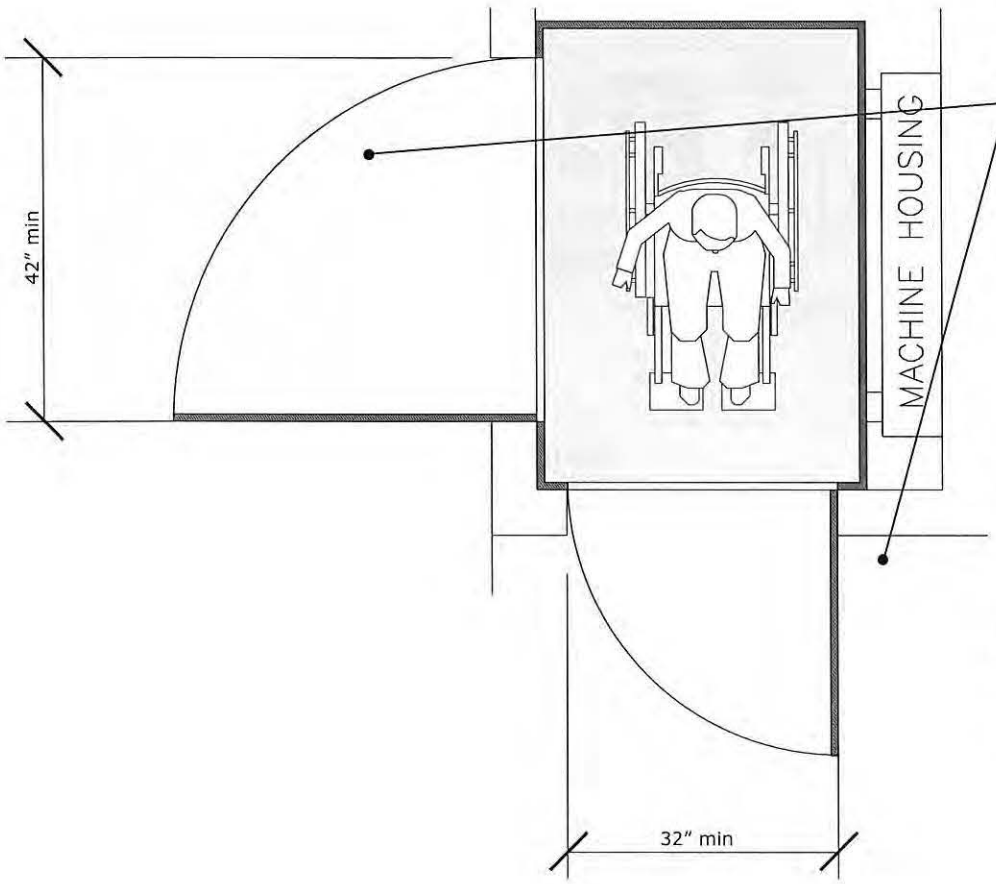

Door Sizes
1116B.2.6, *410.6*
-42″ min. side door
-32″ min. front door
-Use of a platform lift cannot require that a person using a wheelchair back out of the lift unless there is a power operator on the doors

Maintenance
1116B.2.5.1, *410.1*
-Platform lifts shall have a yearly service contract, with a signed & dated log of weekly tests
-Platform lifts shall provide a self-recharging battery backup in case of a power failure
-***Best Practice:*** Include Emergency Phone in all platform lifts (See p. 24)

© June 2012 Designing Accessible Communities. All rights reserved.

Emergency Evacuation Signs

Raised Characters
1117B.5.5, *703.2*
-Duplicated in Braille
-1/32" min. above background
-Uppercase
-Sans serif font (not italic, oblique, script, decorative or unusual)
-Height of characters: 5/8" min. to 2" max.

Visual Characters
1117B.5.2, *703.5*
-Non-glare finish
-Contrast (light-on-dark or dark-on-light)
-40" min. AFF

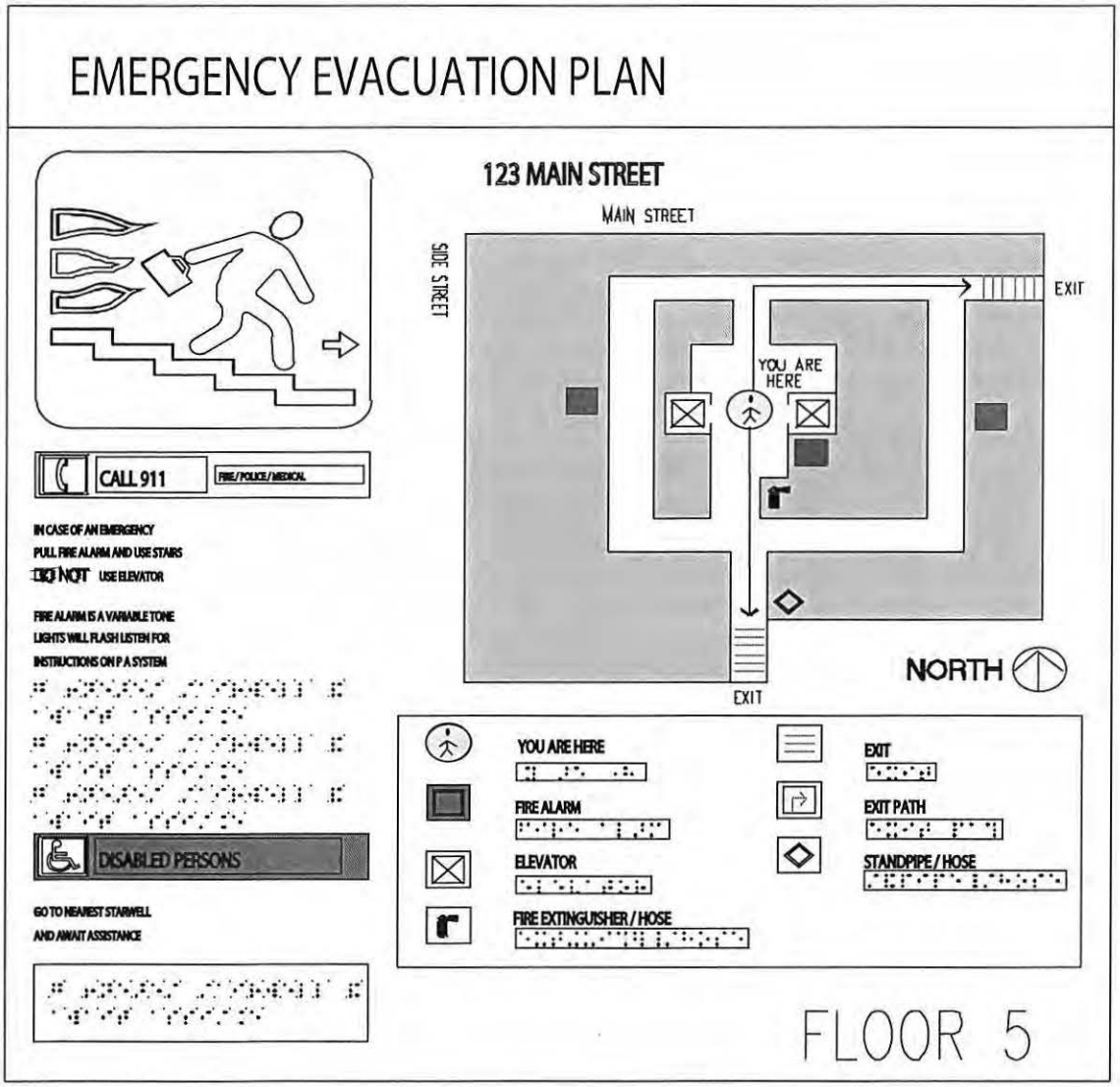

Braille
1117B.5.5, 1117B.5.6, *703.3*
-Use contracted (Grade 2) Braille
-Below corresponding text
-Separated 3/8" min. (1/2" max.) from any other tactile character, raised borders and decorative elements

Mounting
703.4
-48" min. AFF to baseline of lowest tactile element
-60" max. AFF to baseline of highest tactile element
-Posted at all required exit stairs, every elevator landing, and inside public entrances to large, multi-storied and/or multi-roomed buildings

General
-Make the info available to everyone, regardless of ability
-See California Code of Regulations, Title 19, Section 3.09 or the City of San Francisco for more info
-The sign above is based on San Francisco design policy, and is not mandated to look like this or follow this format by state or federal accessibility regulations. The requirements listed are those for signs in general and the design reflects one option for applying those requirements.

© June 2012 Designing Accessible Communities. All rights reserved.

Restroom Signs

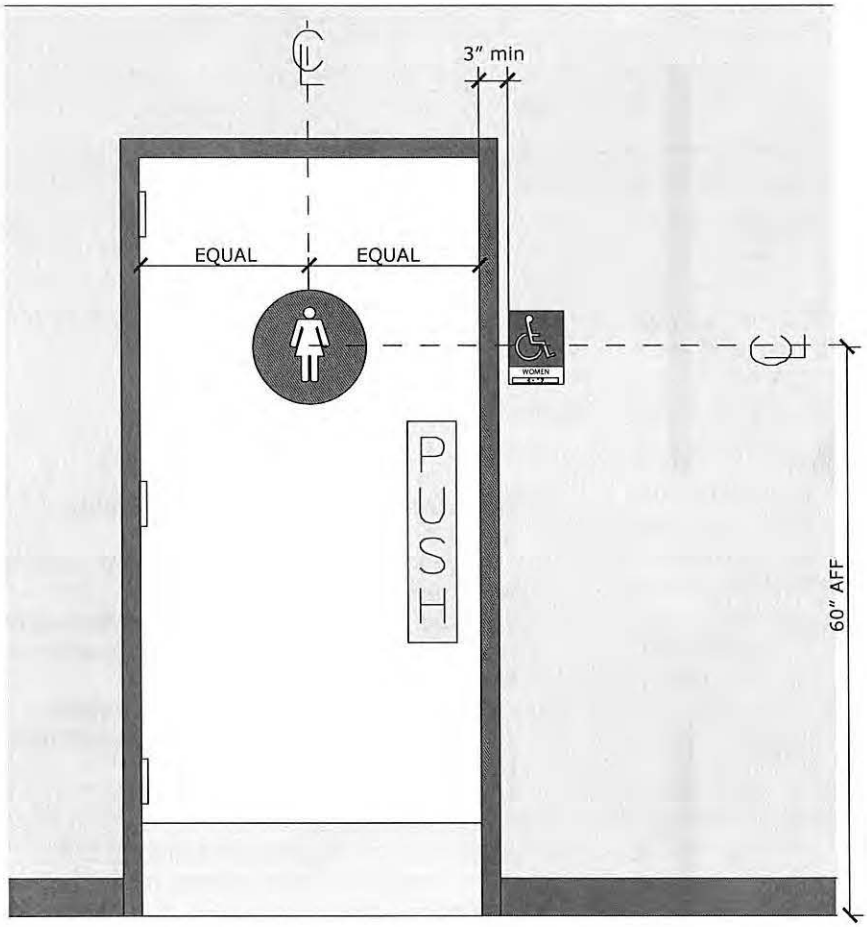

Placement

1117B.5.7, 1115B.6, *703.2, 703.4.1*

-Geometric symbol shall be placed along the horizontal centerline of restroom door
-Room ID sign and geometric symbol centerlines at 60" AFF
-Room ID sign 3" min. outside door swing on wall on latch side of door
-Geometric symbol shall contrast door (light-on-dark or dark-on-light, blue is typ.)
-See p. 28 for more info

Room ID Sign

1117B.5.5, 1117B.5.6, *703.4.1*

-60" AFF to CL of pictogram area on sign
-60" max. AFF to baseline of highest tactile character
-6" min. pictogram area outside dimension, accompanied by text description and Braille directly below
-2" min. text and Braille area below
-Text:
  5/8" min. character height (2" max)
  Raised 1/32" min.
  Sans serif uppercase characters
  Horizontal format
-Braille:
  Contracted (Grade 2) Braille
  Dots 1/10" apart on center in each cell
  2/10" space between cells
  Dots raised 1/40" min.
  Dots shall be domed or rounded
-Characters and symbols contrast with background (light-on-dark or dark-on-light)

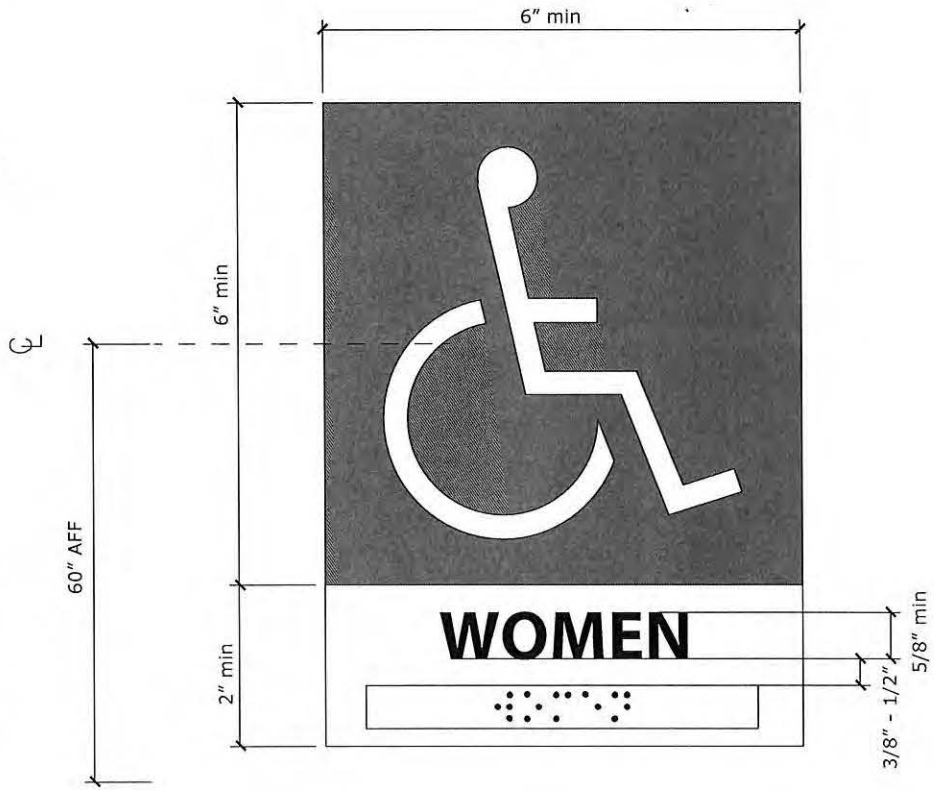

© June 2012 Designing Accessible Communities. All rights reserved.

Restroom Signs

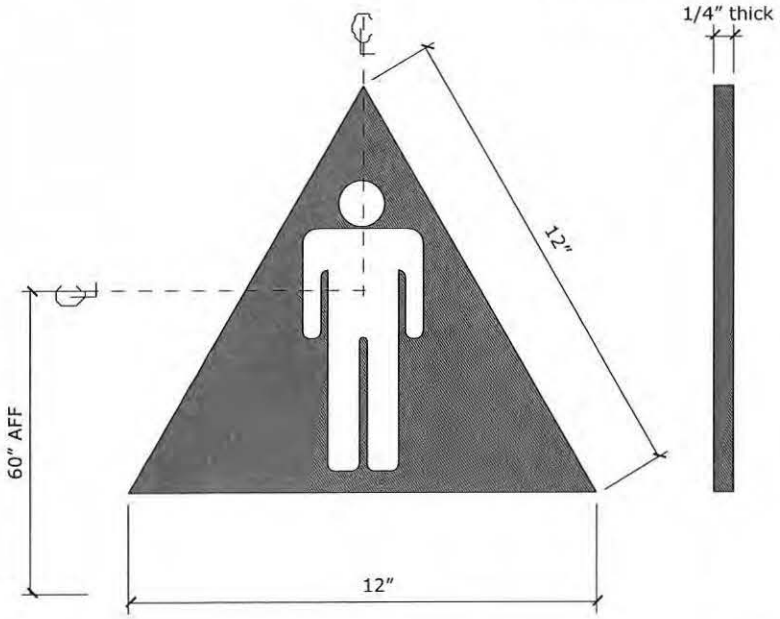

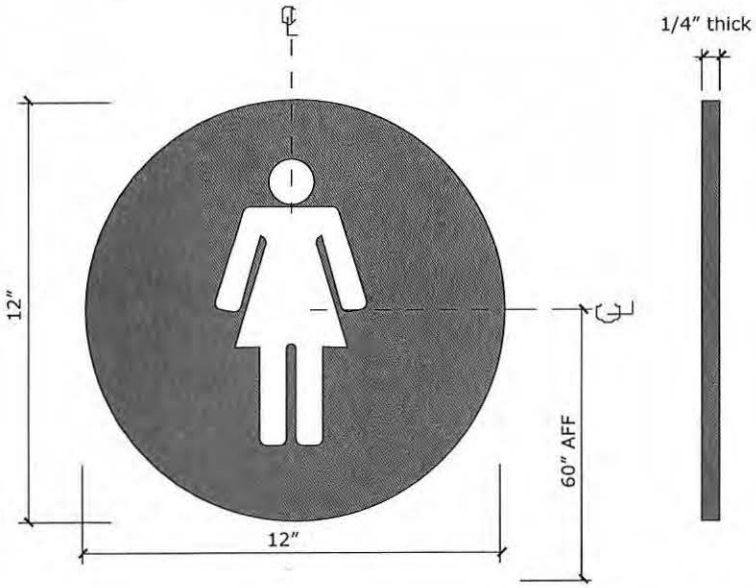

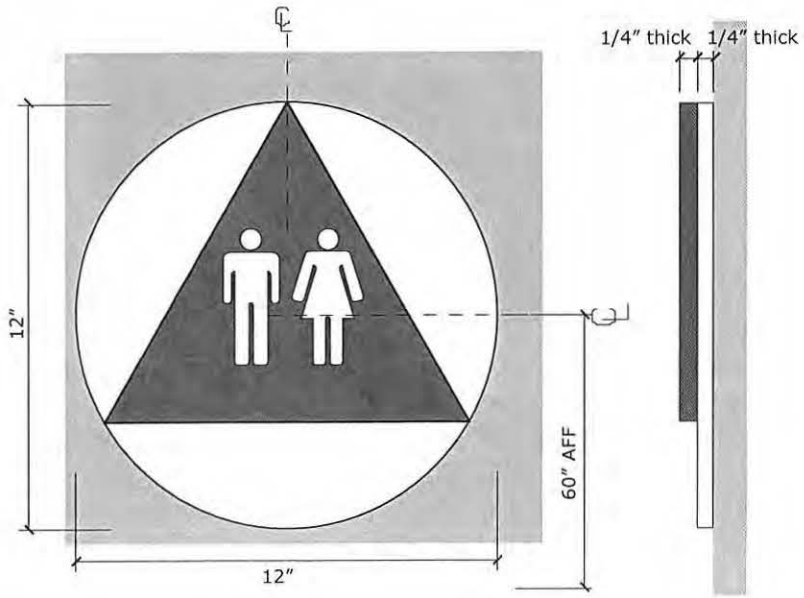

Geometric Identification Symbols

1115B.6

-Doors leading to sanitary facilities marked with geometric symbols
-Geometric symbols should be placed at ALL restrooms to identify gender (accessible or not)
-ISA only used at accessible restrooms
-Centered horizontally on door at 60" AFF to the centerline
-Corners have min. 1/8" radius
-Ease edges of sign
-Men's Room: equilateral triangle, 1/4" thick, edges 12" long, vertex pointing upward
-Women's Room: Circle, 1/4" thick, 12" diameter
-Unisex Room: Circle, 1/4" thick, 12" diameter, with a 1/4" thick triangle superimposed within the 12" diameter
-All symbols contrast light on dark, or dark on light, and contrast with door surface
-***Best Practice:*** no raised characters, symbols, or Braille on geometric symbols [tactile information should be placed on sign at the strike side of door (See p. 27 for more info)]

© June 2012 Designing Accessible Communities. All rights reserved.

Toilet Facilities

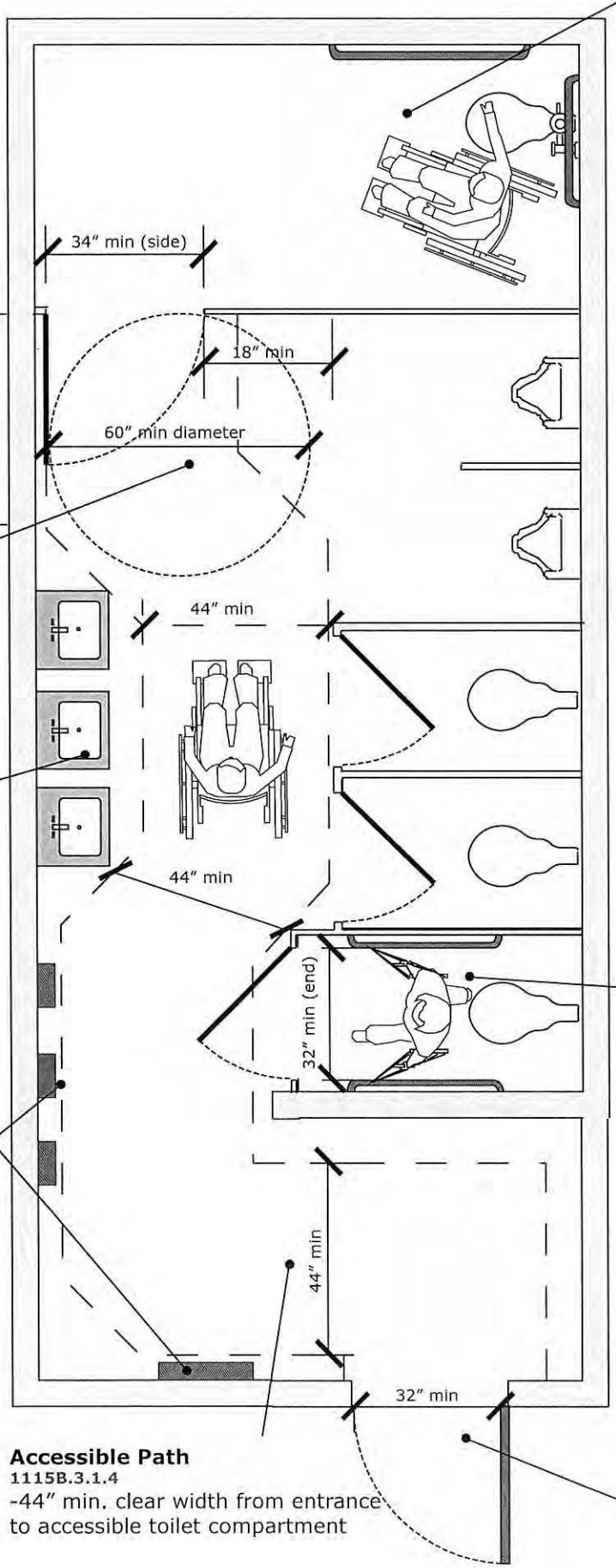

Wheelchair Accessible Stall
1115B.3.1, 1115B.4.1, *604.3, 604.8.1*
-Min. 1 wheelchair accessible stall
-Automatic-closer on stall door
-34" wide door (side entrance) OR
-32" wide door (end entrance)
-18" min. clear space on strike side of door
-See p. 30-31 for more info

Clear Space by Door
1115B.3.1.4
-48" min clear space in front of stall door

Urinals
-See p. 33 for more info

Turning Space
1115B.3.1.4
-60" min diameter clear turning space

Lavatories
1115B3.1.3
-5% min (but not <1) accessible
-30" x 48" clear floor space
-See p. 37 for more info

Ambulatory Accessible Stall
1115B.3.1.5, *604.8.2*
-Where there are 6+ stalls, provide at least 1 ambulatory accessible stall
-Outward swinging door
-Parallel grab bars
-See p. 32 for more info

Restroom Fixtures
-See p. 36 for more info

Accessible Path
1115B.3.1.4
-44" min. clear width from entrance to accessible toilet compartment

Door
1133B.3.1
-32" min. clear width

© June 2012 Designing Accessible Communities. All rights reserved.

Toilet Stalls, Wheelchair Accessible, Side Entry

General
1115B.1, *213.1*
-All multi-user toilet rooms must have at least 1 wheelchair accessible stall
-On accessible route

Side Grab Bar
1115B.4.3, *604.5.1*
-Provide grab bar on closest side wall
-42" min. length
-12" max. from rear wall to near end of grab bar
-54" min. from rear wall to far end of grab bar

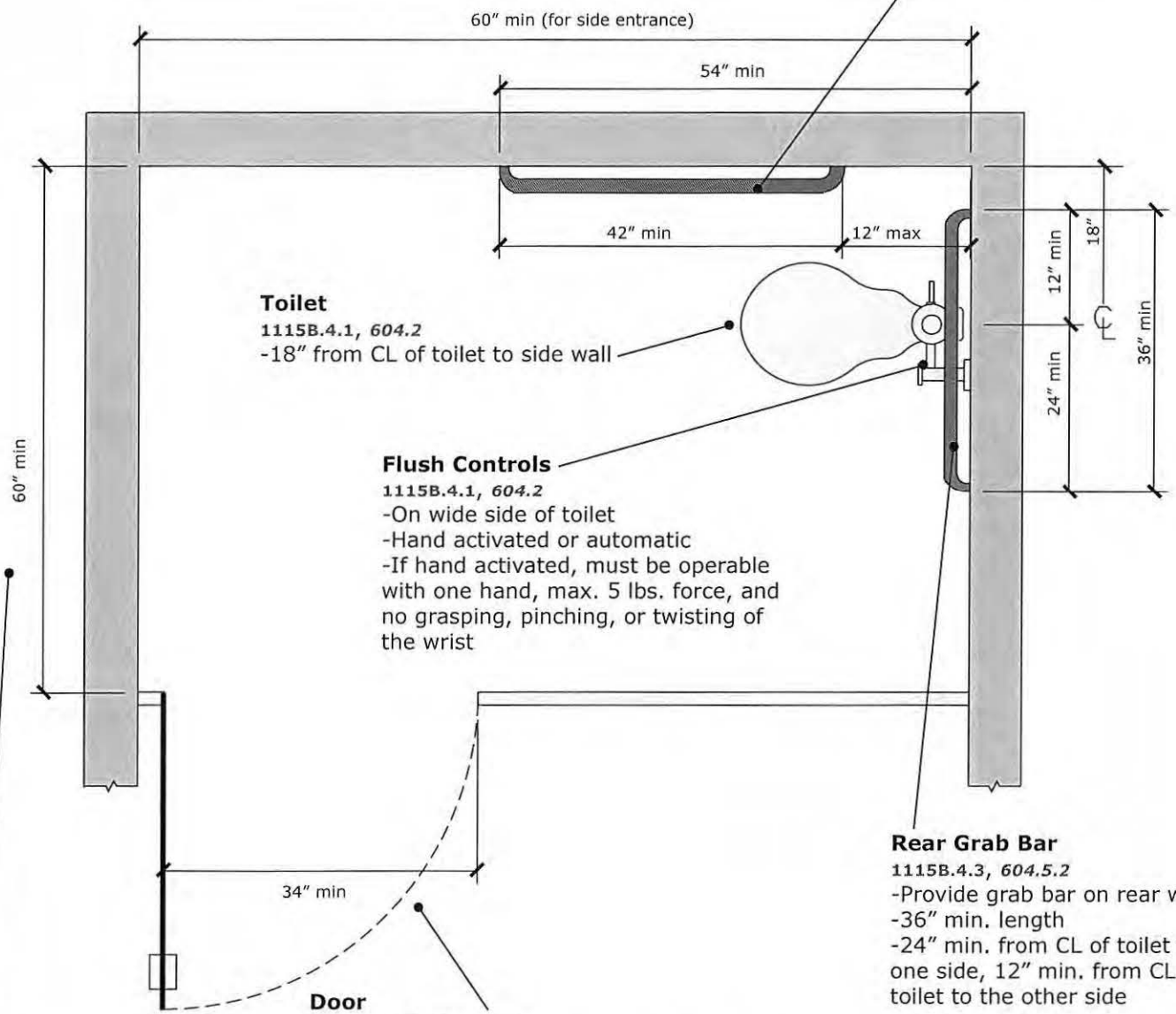

Toilet
1115B.4.1, *604.2*
-18" from CL of toilet to side wall

Flush Controls
1115B.4.1, *604.2*
-On wide side of toilet
-Hand activated or automatic
-If hand activated, must be operable with one hand, max. 5 lbs. force, and no grasping, pinching, or twisting of the wrist

Rear Grab Bar
1115B.4.3, *604.5.2*
-Provide grab bar on rear wall
-36" min. length
-24" min. from CL of toilet to one side, 12" min. from CL of toilet to the other side

Door
1115B.3.4.5, *604.8.1.2*
-34" min. clear width for side entry stall
-Loop or U-shaped door pulls installed on both sides of stall door immediately below latch
-Use slide or dial/lever latch locking mechanisms
-Self-closing door
-Door may not swing into minimum required compartment area

Side Entry Stall Size
1115B.3, *604.3.1, 604.8.1.1*
-60" min. width measured from side wall
-60" min. depth measured from rear wall

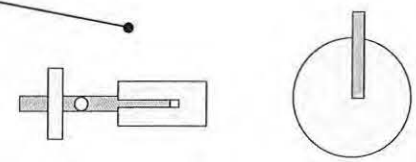

© June 2012 Designing Accessible Communities. All rights reserved.

Toilet Stalls, Wheelchair Accessible, End Entry

General
1115B.1, *213.1*
-All multi-user toilet rooms must have at least 1 wheelchair accessible stall
-On accessible route

Rear Grab Bar
1115B.4.3, *604.5.2*
-Provide grab bar on rear wall
-36″ min. length
-24″ min. from CL of toilet to one side, 12″ min. from CL of toilet to the other side

Side Grab Bar
1115B.4.3, *604.5.1*
-Provide grab bar on closest side wall
-42″ min. length
-12″ max. from rear wall to near end of grab bar
-54″ min. from rear wall to far end of grab bar

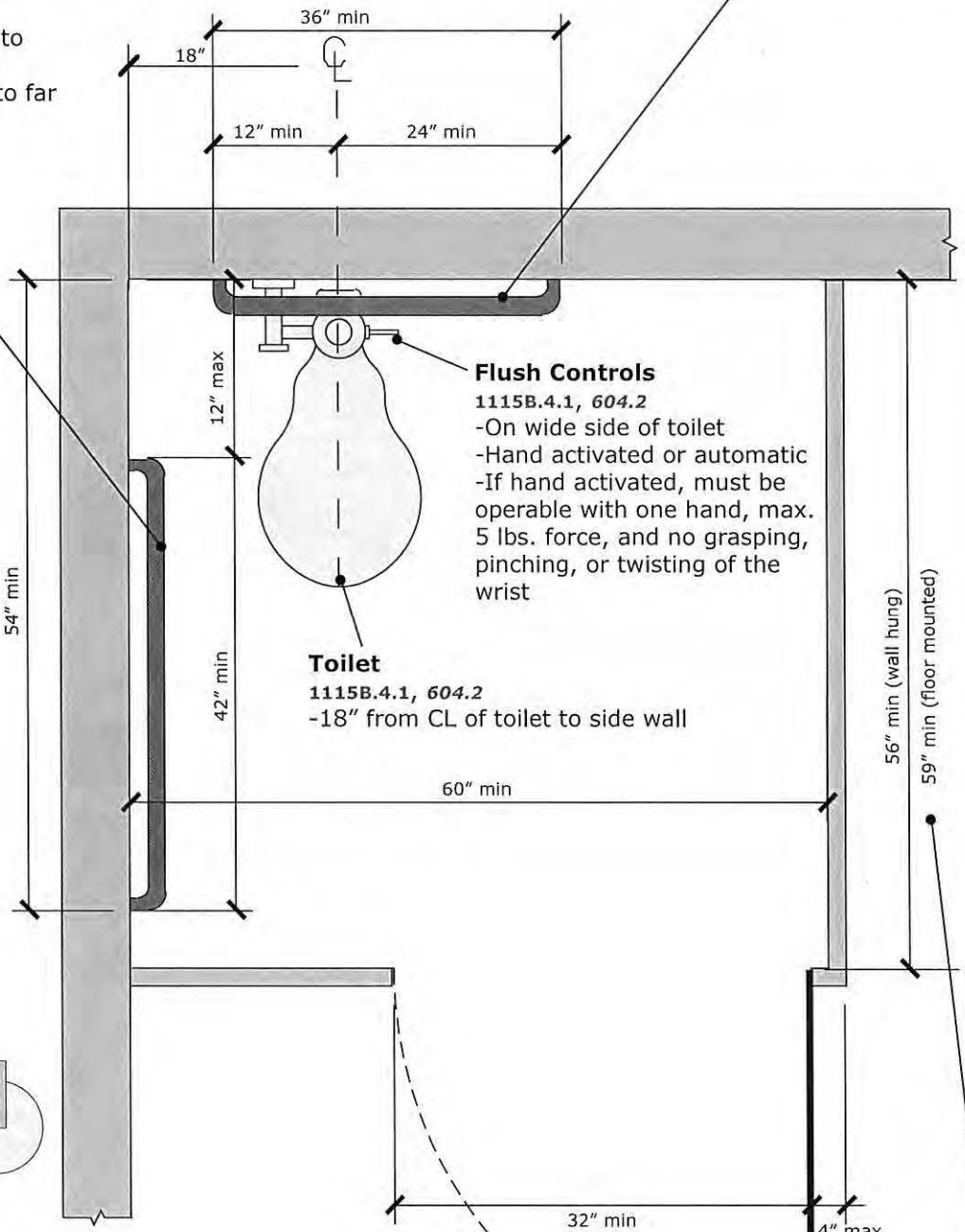

Flush Controls
1115B.4.1, *604.2*
-On wide side of toilet
-Hand activated or automatic
-If hand activated, must be operable with one hand, max. 5 lbs. force, and no grasping, pinching, or twisting of the wrist

Toilet
1115B.4.1, *604.2*
-18″ from CL of toilet to side wall

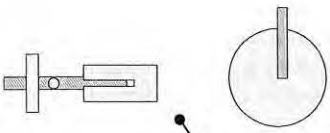

Door
1115B.3.4.5, *604.8.1.2*
-32″ min. clear width for end entry stall
-4″ max. from hinge to wall
-Loop or U-shaped door pulls installed on both sides of stall door immediately below latch
-Use slide or dial/lever latch locking mechanisms
-Self-closing door
-Door may not swing into minimum required compartment area

End Entry Stall Size
1115B.3, *604.3.1, 604.8.1.1*
-60″ min. width measured from side wall
-56″ min. (wall hung toilet) or 59″ min. (floor mounted toilet) depth measured from rear wall

© June 2012 Designing Accessible Communities. All rights reserved.

Toilet Stalls, Ambulatory Accessible

General
1115B.3.5, ***213.3.1***
-Where there are more than 6 stalls (toilets and/or urinals), at least one must be an ambulatory accessible stall
-On accessible route

Stall Size
1115B.3.5, ***604.8.2.1***
-60" min. depth measured from rear wall
-36" width between side walls or partitions

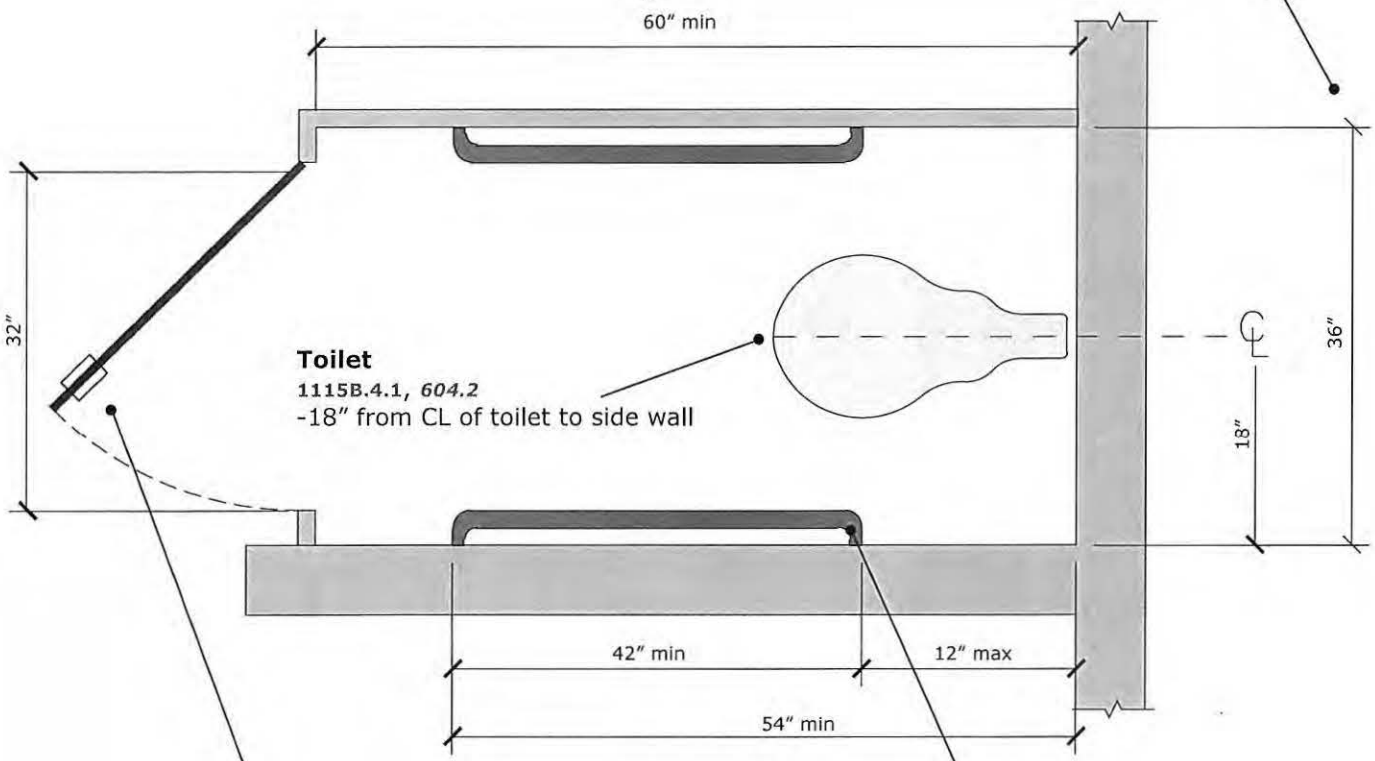

Toilet
1115B.4.1, ***604.2***
-18" from CL of toilet to side wall

Door
1115B.3.4.5, ***604.8.2***
-32" min. clear width
-Loop or U-shaped door pulls installed on both sides of stall door immediately below latch
-Use slide or dial/lever latch locking mechanisms
-Self-closing door
-Door may not swing into minimum required compartment area

Side Grab Bar
1115B.4.3, ***604.5.1, 604.8.2.3***
-Provide grab bars on both side walls or partitions
-42" min. length
-12" max. from rear wall to near end of grab bar
-54" min. from rear wall to far end of grab bar

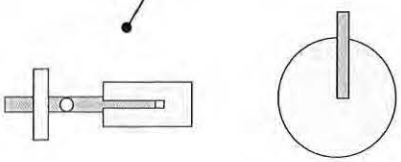

© June 2012 Designing Accessible Communities. All rights reserved.

URINALS

General
1115B.4.2.1, *213.3.3*
-Urinals should be wall-hung or stall type
-On accessible route
-Where more than 1 urinal is provided, at least 1 shall be accessible

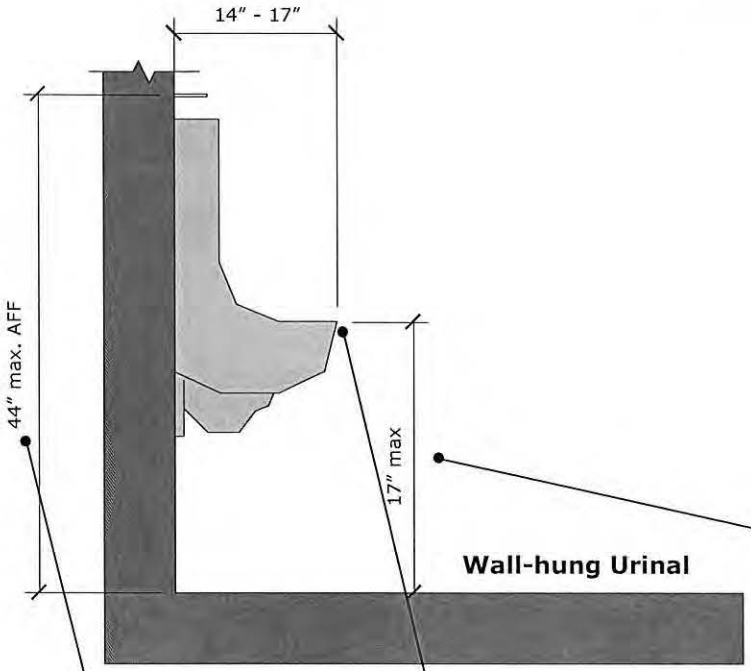

Wall-hung Urinal

Mounting Height
1115B.4.2.1, *605.2*
-17" max. AFF to top of rim

Flush Controls
1115B.4.2.2, *605.4*
-44" max. AFF
-Operable with one hand
-No tight grasping, pinching, or twisting of the wrist
-5 lbs. max. force to operate

Depth of Urinal
1115B.4.2.1, *605.2*
-14" min. to 17" max. from wall to outer surface of rim

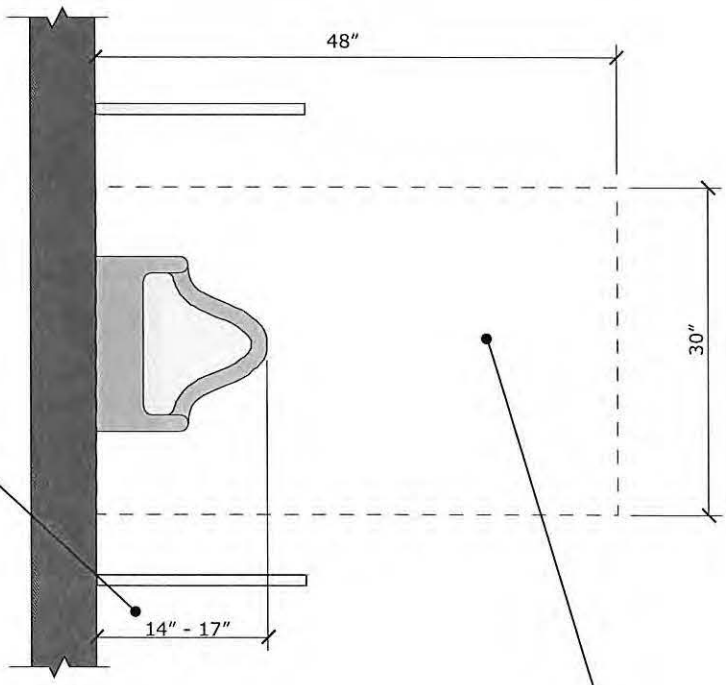

Clear Floor Space
1115B.4.2.3, *605.3*
-30" x 48" min. clear floor space in front of urinal for a front approach

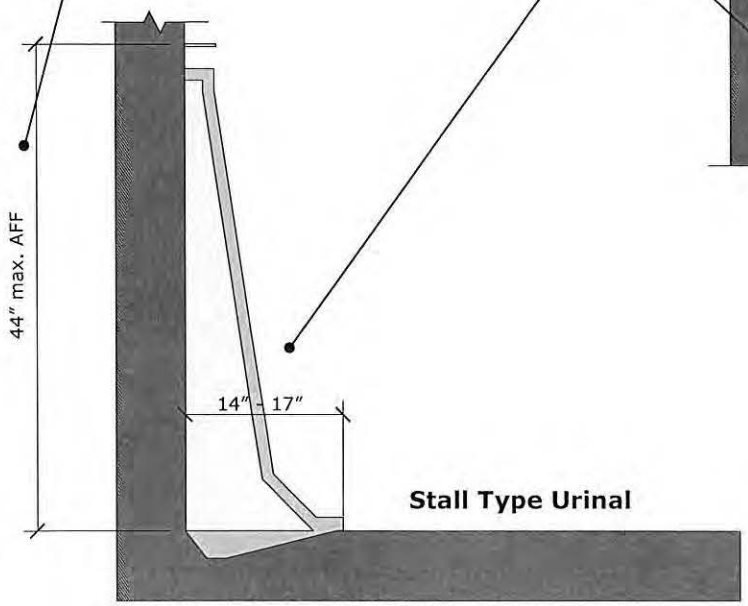

Stall Type Urinal

© June 2012 Designing Accessible Communities. All rights reserved.

Single-User Toilets

Toilet
1115B.4.1, *604.2*
-18" from CL of toilet to side wall

Rear Grab Bar
1115B.4.3, *604.5.2*
-Provide grab bar on rear wall
-36" min. length
-24" min. from CL of toilet to one side, 12" min. from CL of toilet to the other side

Lavatory
1115B.4.3.2
-18" min from side wall or partition to centerline of lavatory
-See p. 37 for more info

Flush Controls
1115B.4.1, *604.2*
-On wide side of toilet
-Hand activated or automatic
-If hand activated, must be operable with one hand, max. 5 lbs. force, and no grasping, pinching, or twisting of the wrist

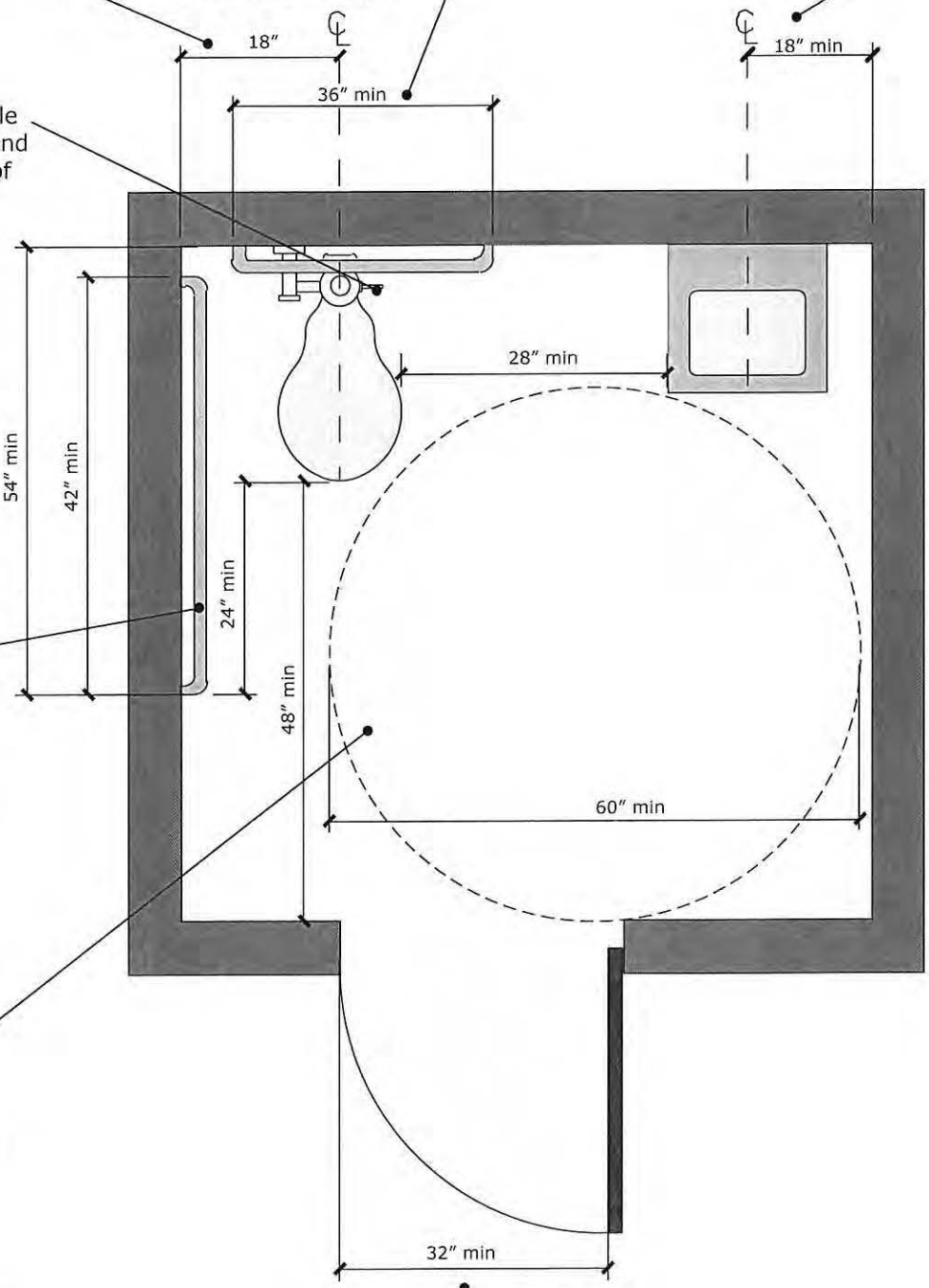

Side Grab Bar
1115B.4.3, *604.5.1*
-Provide grab bar on closest side wall
-42" min. length
-12" max. from rear wall to near end of grab bar
-54" min. from rear wall to far end of grab bar
-24" min. from front of toilet to frong end of grab bar

Clear Space
1115B.3.2, 1115B.3.3, 1115B.4
-28" min. from outside edge of toilet to sink, 32" to wall
-60" min. diameter turning radius in front of toilet
-48" min from front of toilet to wall
-***Best Practice:*** Leave a wheelchair space (30" x 48" min.) on wide side of toilet. Keep this area clear of trash cans, furniture and other storage

Door
1115B.3.4.5, *604.8.2*
-32" min. clear width

© June 2012 Designing Accessible Communities. All rights reserved.

Toilet Stall Elevation

Side Grab Bar
1115B.4.3, *604.5.1*
-Provide grab bar on closest side wall
-42" min. length
-12" max. from rear wall to near end of grab bar
-54" min. from rear wall to far end of grab bar
-24" min. from front of toilet to frong end of grab bar

Hook
603.4
-48" AFF to highest operable part
-Side wall location preferred

Rear Grab Bar
1115B.4.1.3
-33" AFF to CL of grab bar
-Parallel to floor
-If high toilet tank prohibits 33" mounting height, rear grab bar only may be mounted at 36" AFF to CL of grab bar, with a mim. 1-1/2" clearance between bottom of grab bar and top of tank

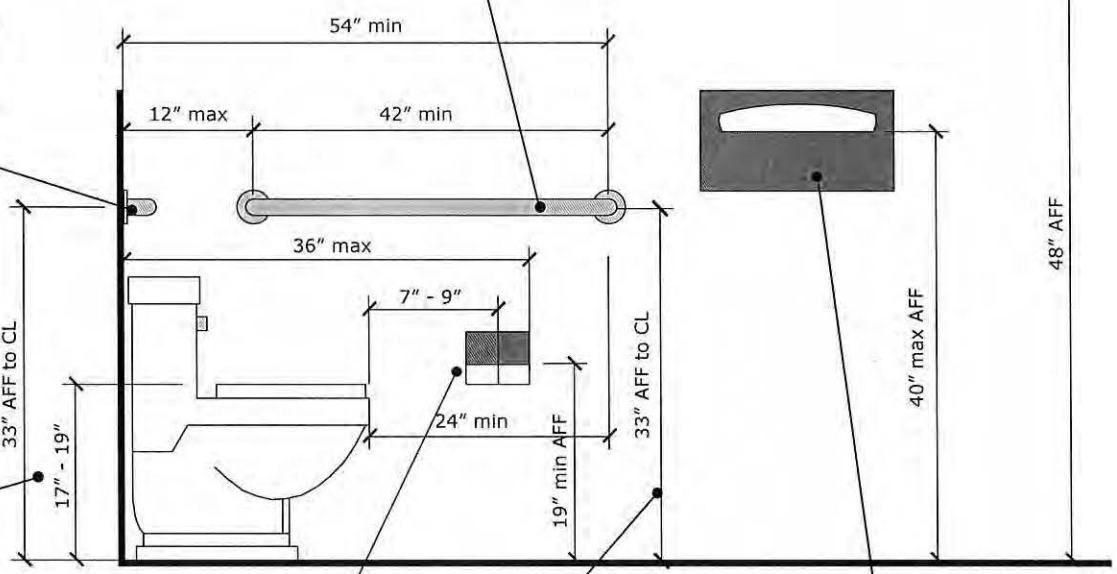

Toilet Seat Height
1115B.4.1.4, *604.4*
-17" to 19" AFF to top of seat

Grab Bar
1115B.4.1.3, *609.4*
-33" AFF to CL of grab bar
-Parallel to floor

Toilet Seat Cover Dispenser
1115B.8.3
-40" max. to operable part
-Do not place behind toilet or above grab bar

Toilet Paper Dispenser
1115B.8.4, *604.7*
-36" max. from back wall to front end of dispenser
-7" to 9" from front of toilet to CL of dispenser
-19" min. AFF to CL of dispenser
-Mounted below grab bar
-Do not use large dual roll dispensers, as they:
  -Generally protrude more than 4" from the wall
  -Toilet paper may tear off inside the dispenser, making it impossible and/or dangerous for someone with limited mobility to reach the paper. They may lose their balance and fall.

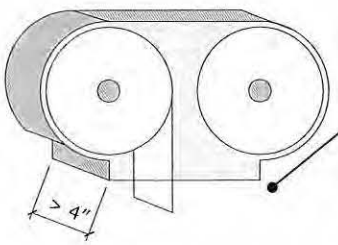

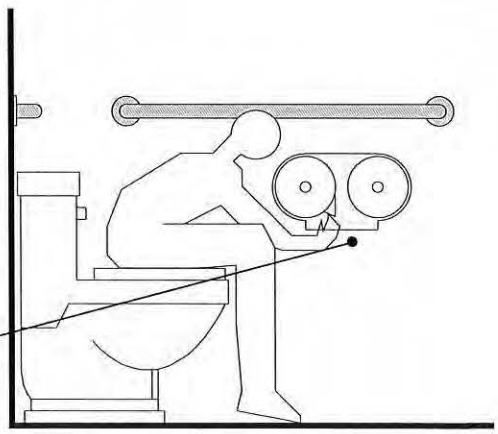

© June 2012 Designing Accessible Communities. All rights reserved.

Restroom Fixtures

Surface Mounted Manual Paper Towel Dispenser

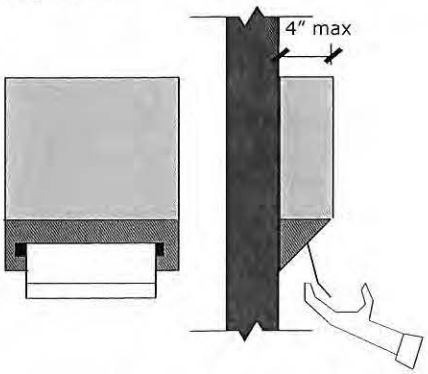

Slimline Electric Hand Dryer

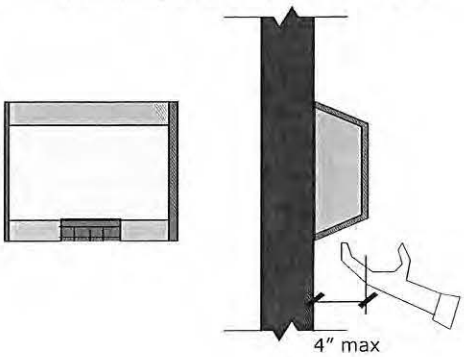

Recessed Manual Paper Towel Dispenser

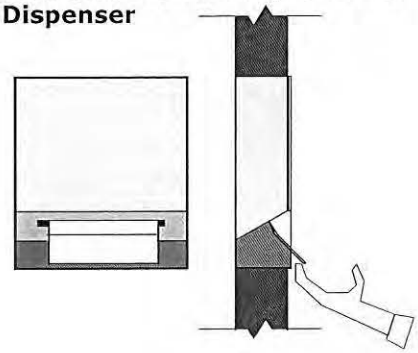

Surface Mounted Trash Can

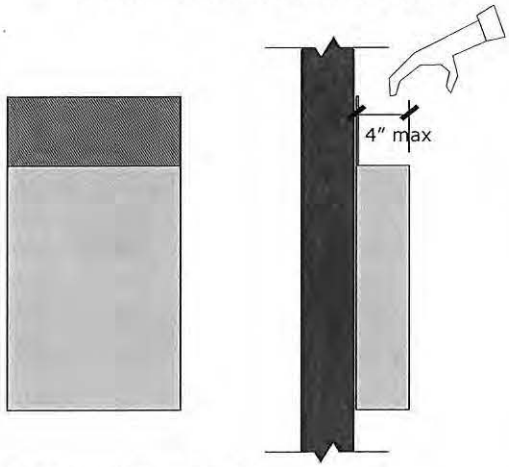

Recessed Sanitary Napkin/ Tampon Dispenser

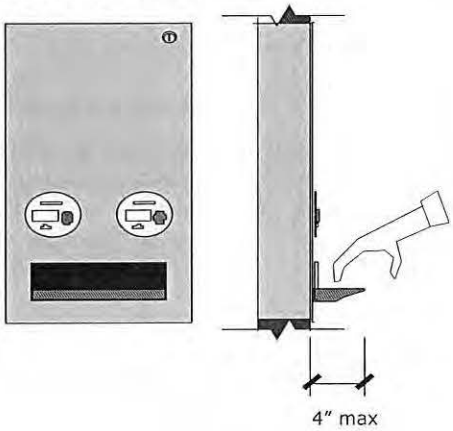

Recessed Trash Can

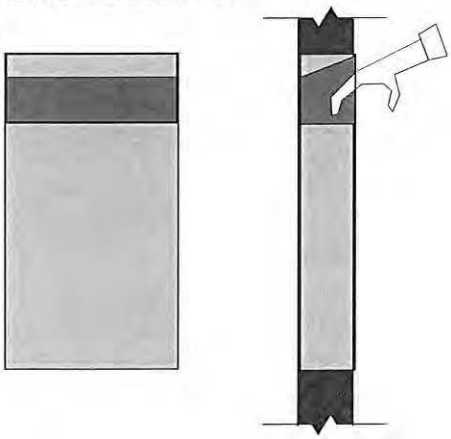

General

1115B.8.3, 307.2, 308.2, 308.3

-Where fixtures (i.e. paper towel dispensers, hand dryers, trash cans, sanitary napkin/tampon dispensers, etc.) are provided, at least one of each type:

- -must be on an accessible route
- -have all operable parts, including coin slots, mounted at 40" max. AFF
- -have all operable parts/ controls operable by one hand, with no tight grasping, pinching, or twisting of the wrist

-Fixtures mounted with their lowest edge between 27" and 80" AFF may not protrude more than 4" max. into the clear path of travel

-Best Practice: Use recessed, semi-recessed or slimline surface-mounted fixtures not protruding more than 4" from the wall

-Best Practice: Use fixed trash cans to avoid misplaced trash cans interfering with clear paths of travel or required clear floor spaces

-Best Practice: Do not use electric hand dryers that require user to insert hands from top (i.e. Dyson Airblade, Mitsubishi Jet Towel). These hand dryers would require a user in a wheelchair to lean forward to use them, which is not easy to do from a seated position and may cause falls. Also, documentation for these dryers indicates that they are unsuitable for use by "children and infirm persons" without responsible supervision

© June 2012 Designing Accessible Communities. All rights reserved.

LAVATORIES

General

1115B.3.1.3, 1115B.4.3.1, 1115B.4.3.4, *214.3.4, 606.5*

-Min. 5% (but not <1) of lavatories must be accessible
-40" max. AFF to bottom of mirrors' reflective surface when placed above lavatories
-If provided, locate soap and towel dispensers within accessible reach ranges (See p. 36, 41) and convenient to someone using the accessible lavatory
-Insulate or cover exposed hot water and drain pipes to protect users from burns and/or sharp edges
-No sharp or abrasive surfaces under lavatories

Faucets and Controls

1115B.4.3.1, *306.3, 309*

-Operable with one hand
-Do not require tight grasping, pinching, or twisting to operate
-Max 5 lbs. of force
-Lever operated, push type, or electronically controlled are acceptable
-Self-closing valves (push-to-use) must remain open for 10 seconds min.
-25" max. reach from front of lavatory or counter to front of controls
-Use a temperature control valve to keep water from reaching scalding temperatures

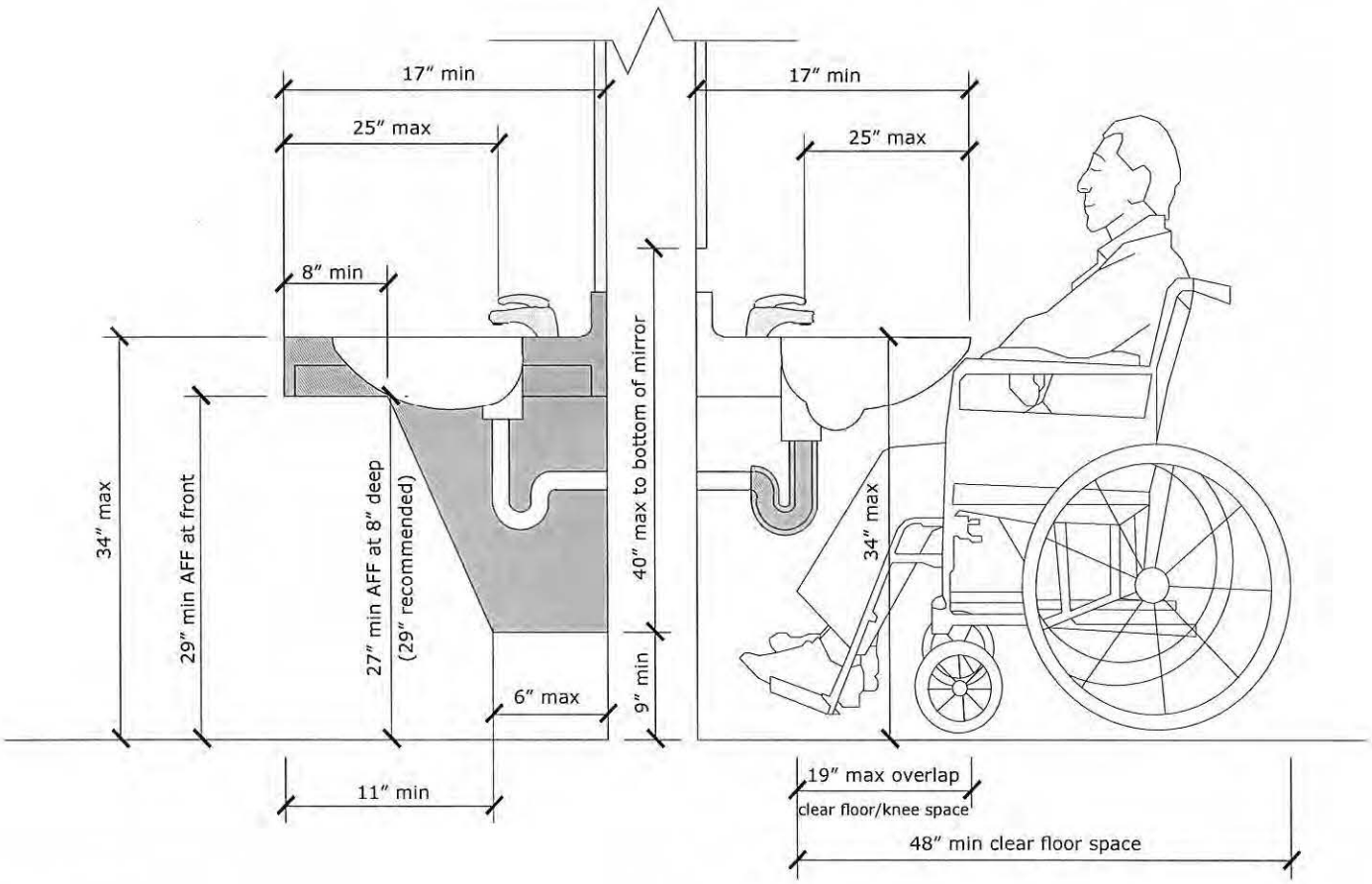

Height

1115B.4.3.2, *306.3*

-Toe Clearance:
  9" min. high at 6" max. from wall
-Knee Clearance:
  29" min. AFF at front of lavatory or counter
  27" min. AFF (29" recommended) at 8" deep from front of lavatory or counter
-Top of Lavatory/Counter:
  34" max. AFF
-***Best Practice:*** The 27" min. knee clearance does not take into account people who use larger wheelchairs or scooters. 29" min. measurements will allow for these

Depth

1115B.4.3.2, 1115B.4.3.3, 1115B.4.3.4, *305.3, 306.2, 606.3*

-17" min. from back wall to front of lavatory or counter
-25" max. from front of lavatory or counter to front of controls
-11" min. depth of knee clearance before toe clearance (27" min., 29" recommended AFF)
-8" min. depth from front of lavatory or counter, 27" min. AFF to underside of lavatory
-48" min. deep clear floor space for forward approach to lavatory, 19" max. overlap allowed underneath lavatory

© June 2012 Designing Accessible Communities. All rights reserved.

LAVATORIES

Distance to Controls
306.3
-25″ max. from front of lavatory or counter to front of controls

Distance from Wall or Partition
1115B.4.3.2
-18″ min. from side wall or partition to centerline of lavatory

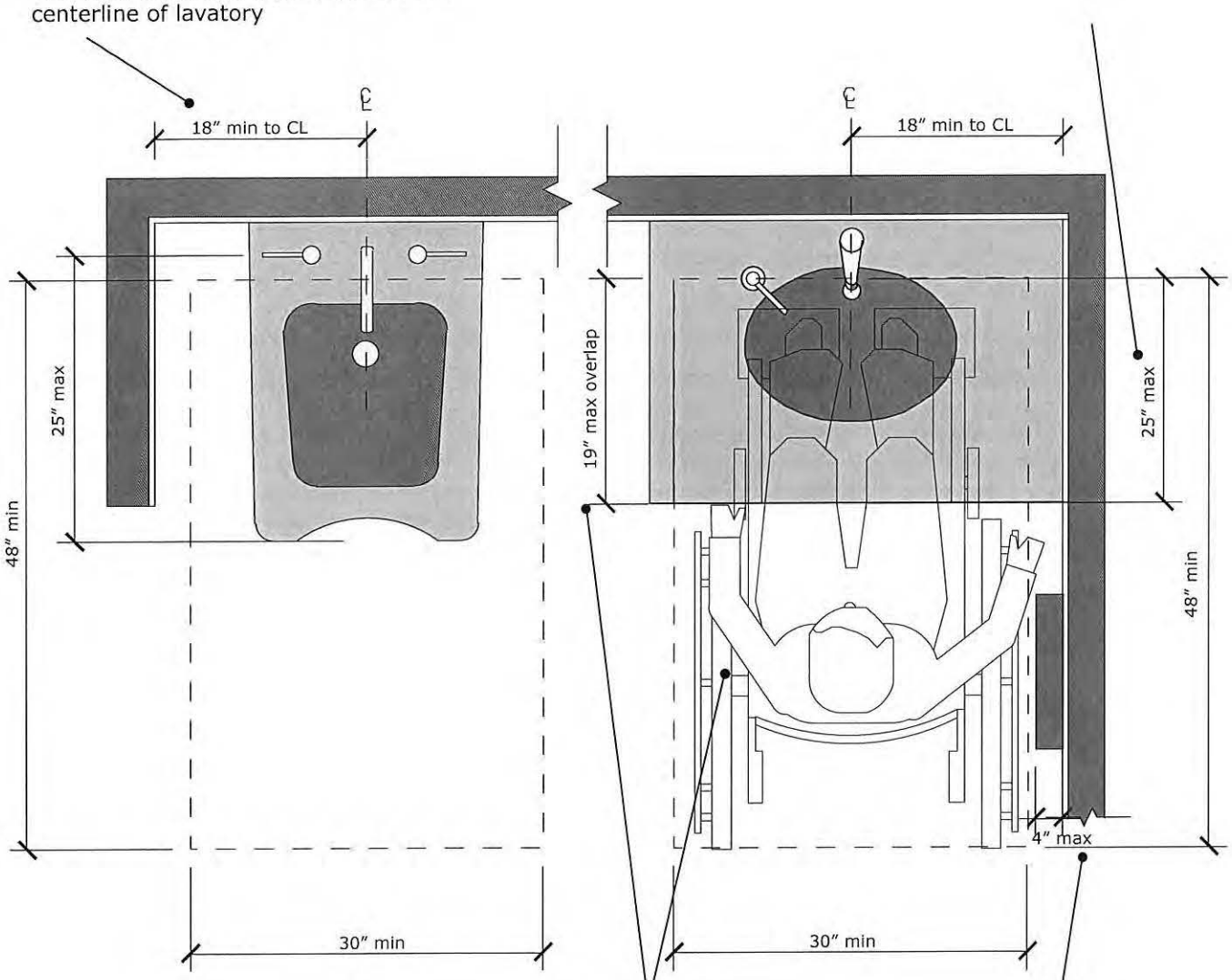

Clear Floor Space
1115B.4.3.3, *305.3*
-30″ x 48″ min. clear floor space for frontal approach to lavatory
-19″ max. allowable overlap with knee and toe clearance under lavatory
-Dispensers, dryers, etc. on side wall must not protrude more than 4″ into required clear space

© June 2012 Designing Accessible Communities. All rights reserved.

TELEPHONES

General
1117B.2.1, *704.2.1*
-At least 50%, but not less than 1, of public phones shall be accessible

Clear Floor Space
1117B.2.2, *704.2.1.1*
-30" x 48" in side or front approach
-Shelf may extend 10" max in front of face of telephone unit, provided there is ample knee clearance beneath it

International Symbol of Accessibility (ISA)
1117B.5.8.1, *703.7.2.1*
-Place ISA on accessible phones
-White pictogram on blue background

Volume Control
1117B.5.8.3, 1117B.2.8, *707.2.3, 704.3*
-At least 25%, but not less than 1, of public phones shall have volume control for users with hearing impairments
-Place volume control symbol on phones so equipped

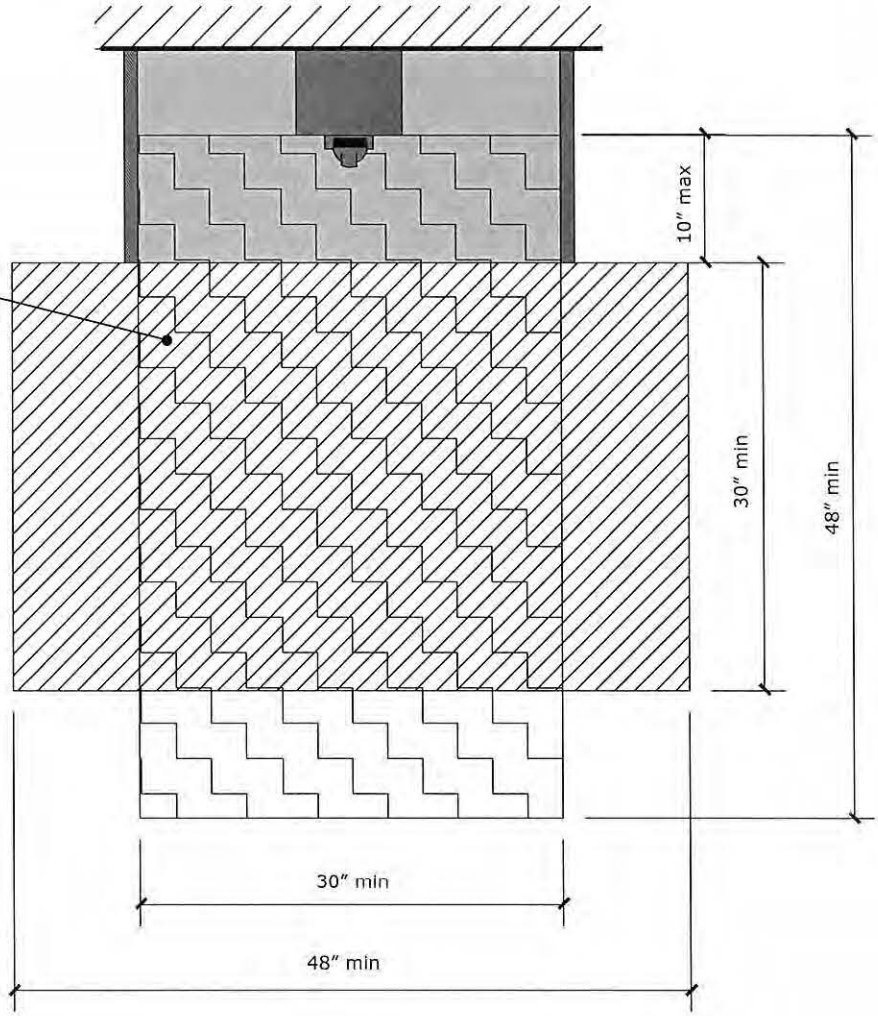

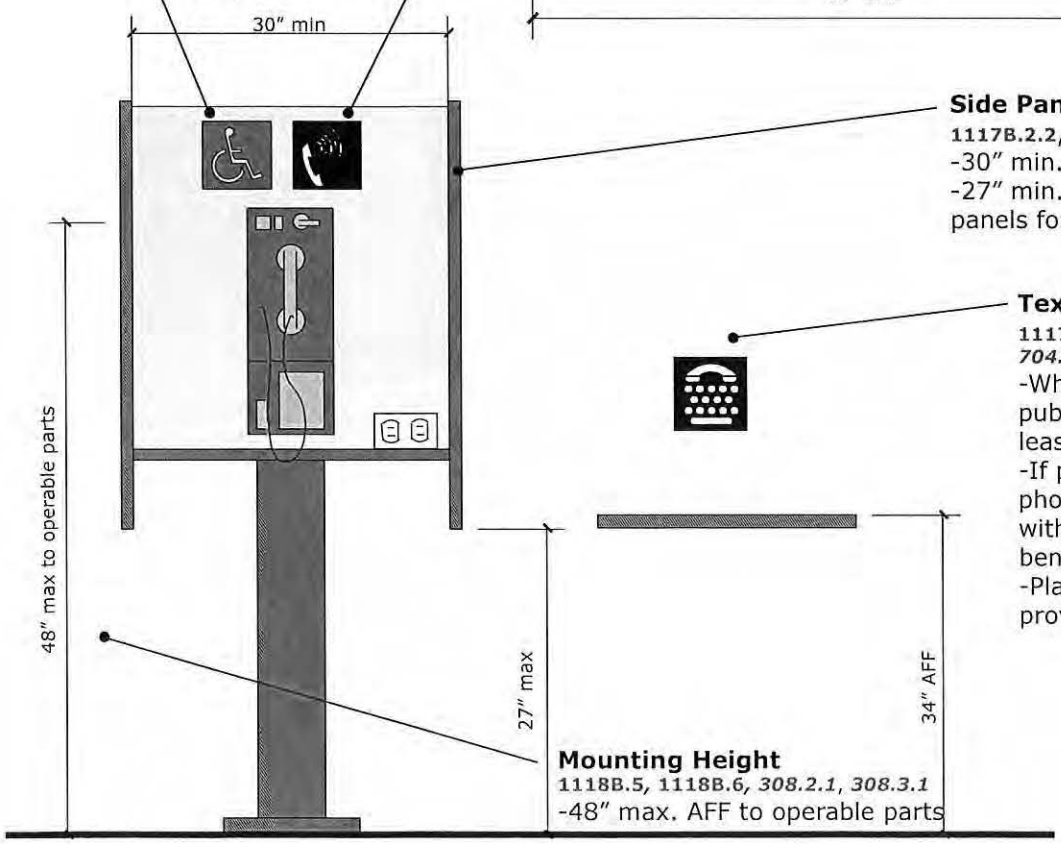

Side Panels
1117B.2.2, *704.2.1.1*
-30" min. between side panels
-27" min. to lower edge of side panels for cane detectability

Text Telephone (TTY)
1117B.5.8.2, 1117B.2.9, *703.7.2.2, 704.4*
-Where there are 4 or more public telephones, provide at least 1 text telephone (TTY)
-If provided on shelf adjacent to phones, 34" AFF to top of shelf, with 27" min. knee clearance beneath
-Place TTY symbol where TTY provided

Mounting Height
1118B.5, 1118B.6, *308.2.1, 308.3.1*
-48" max. AFF to operable parts

© June 2012 Designing Accessible Communities. All rights reserved.

Protruding Objects

Protrusion Limits
1133B.8.6, *307.2*
-Objects protruding from walls with their leading edges from 27" - 80" above the floor may only protrude 4" max. into paths of travel
-Protruding objects may not reduce the clear width of an accessible path of travel

Vertical Clearance/Head Room
1133B.8.6, *307.4*
-All circulation spaces shall have 80" min. clear from the finished floor
-Where the vertical clearance is less than 80", provide a barrier to warn people with blindness or visual impairments
-The leading edge of the barrier or guardrail shall be 27" max. above the finished floor (***Best Practice:*** handrail at 36" to 42", with a lower rail, at 6" min. to 27" max., for cane detectability)

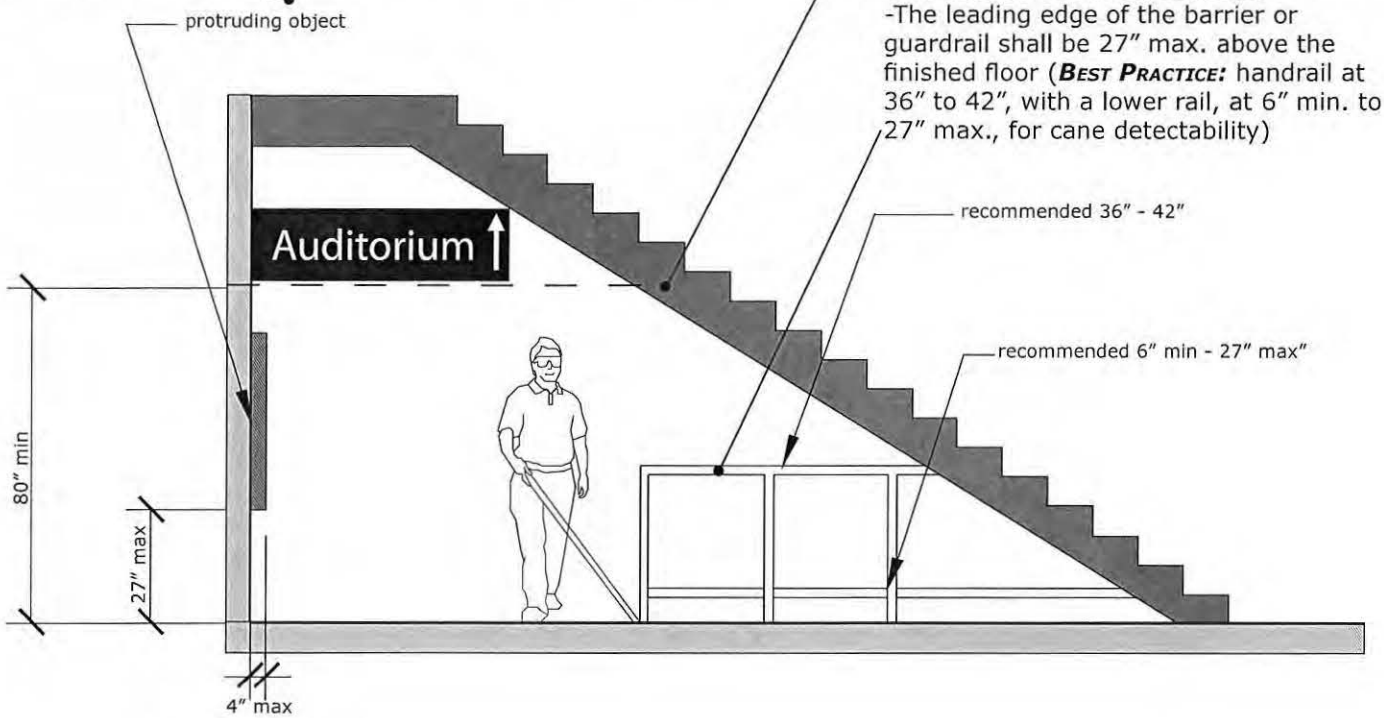

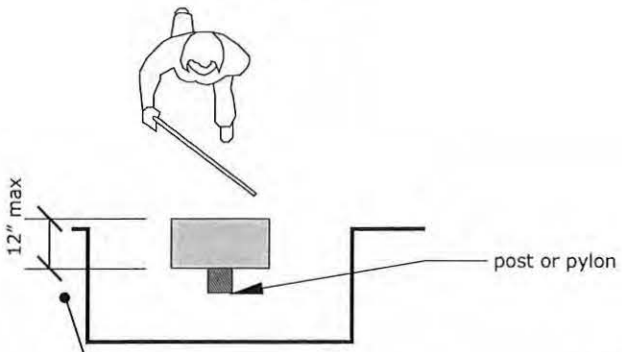

Post-Mounted Objects
1133B.8.6, *307.3*
-Free-standing post-mounted objects may overhang 12" max. when they are between 27" and 80" from the floor

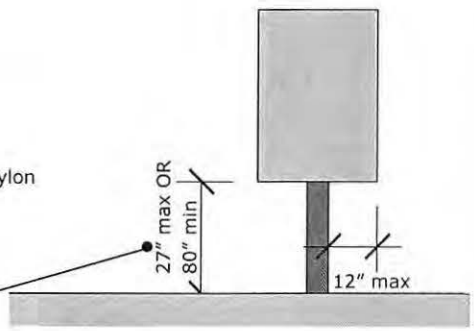

Double Post Mounted Objects
1133B.8.6, *307.3*
-When a sign or obstruction is between 2 posts 12" or more apart, the lower edge shall be 27" max. or 80" min. above the floor

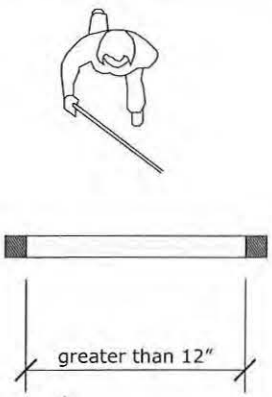

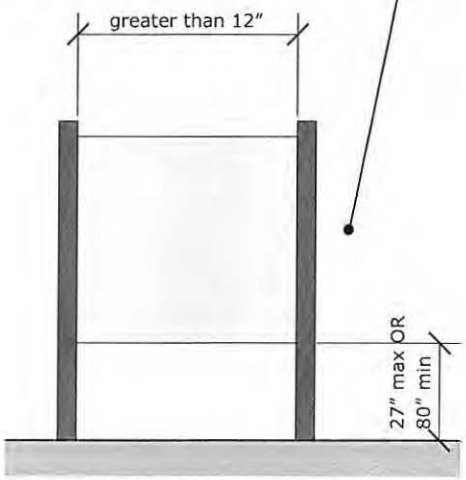

© June 2012 Designing Accessible Communities. All rights reserved.

Reach Ranges

Side Reach (Obstructed)
1118B.6, *308.3.2*
-46″ max. AFF
-Obstruction:
24″ max. deep
34″ max. high

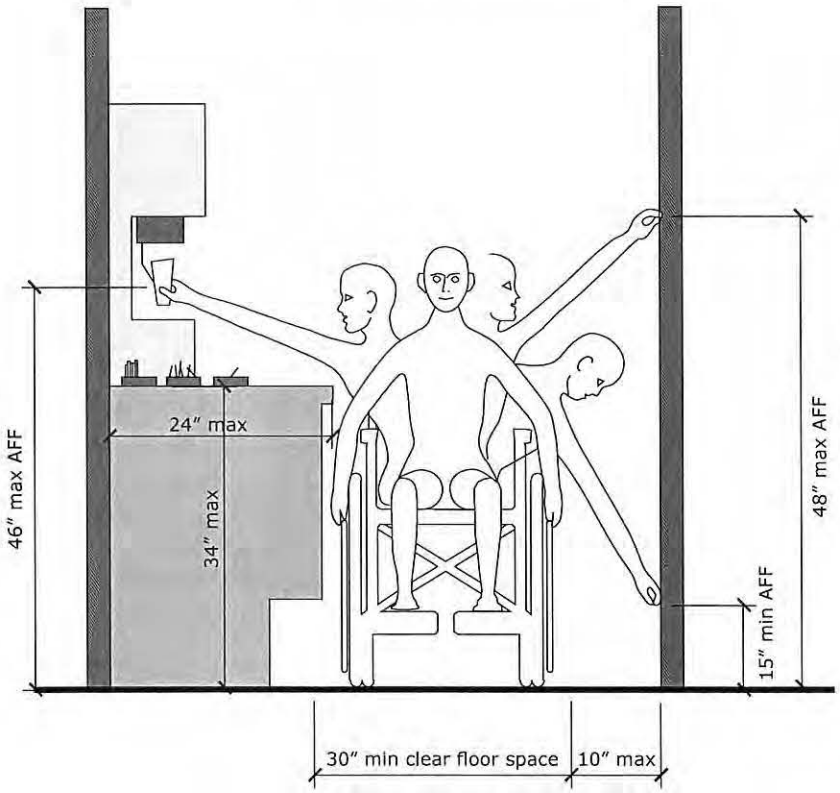

Side Reach
1118B.6, *308.3.1*
-48″ max. AFF
-15″ min. AFF
-30″ min. clear floor space
-10″ max. from wall/ operable parts

Front Reach
1118B.5, *308.2.1*
-48″ max. AFF
-15″ min. AFF
-48″ min. clear floor space

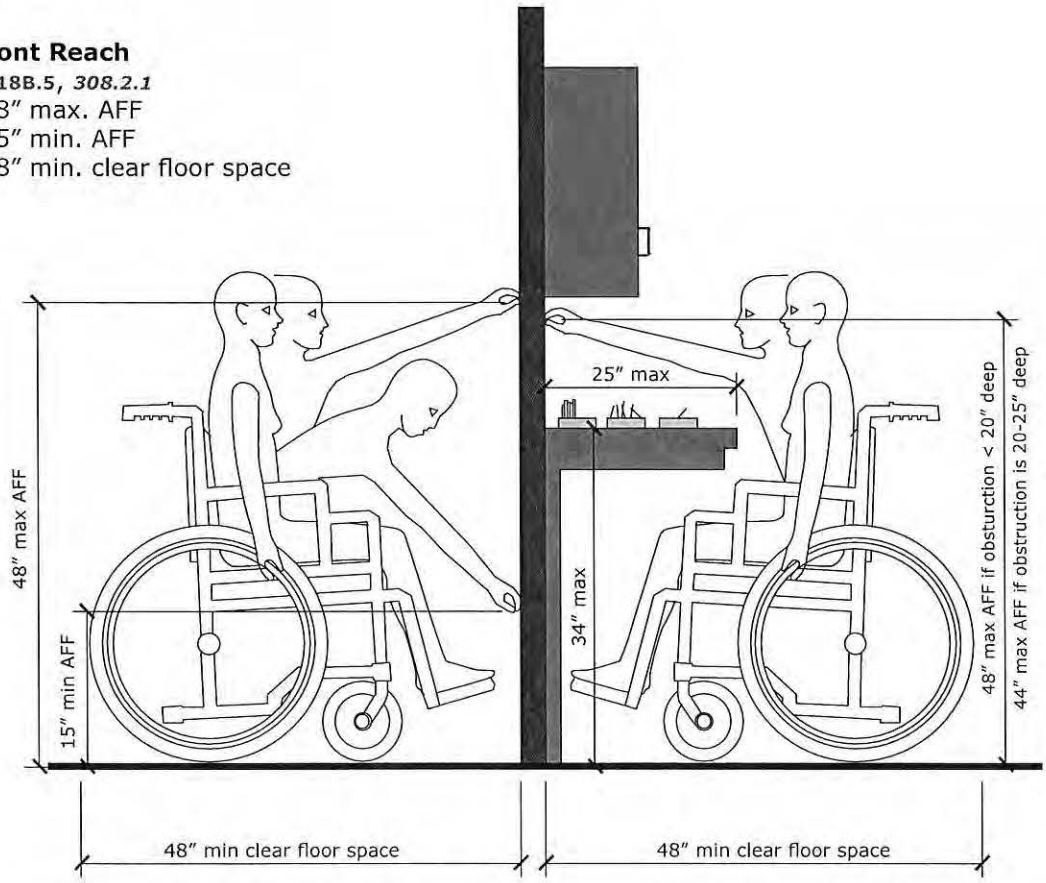

Front Reach (Obstructed)
1118B.5, *308.2.2*
-Obstruction:
25″ max. deep
34″ max. high
-48″ max. AFF if obstruction <20″ deep
-44″ max. AFF if obstruction 20-25″ deep
-Depth of knee space under obstruction must be at least as deep as reach needed to object over obstruction

© June 2012 Designing Accessible Communities. All rights reserved.

TABLES

Clear Path To and Between Tables
1104B.5
-36" min. clear width between tables, seats and other obstacles, ***even with patrons seated at tables***

Four Corners Table Base

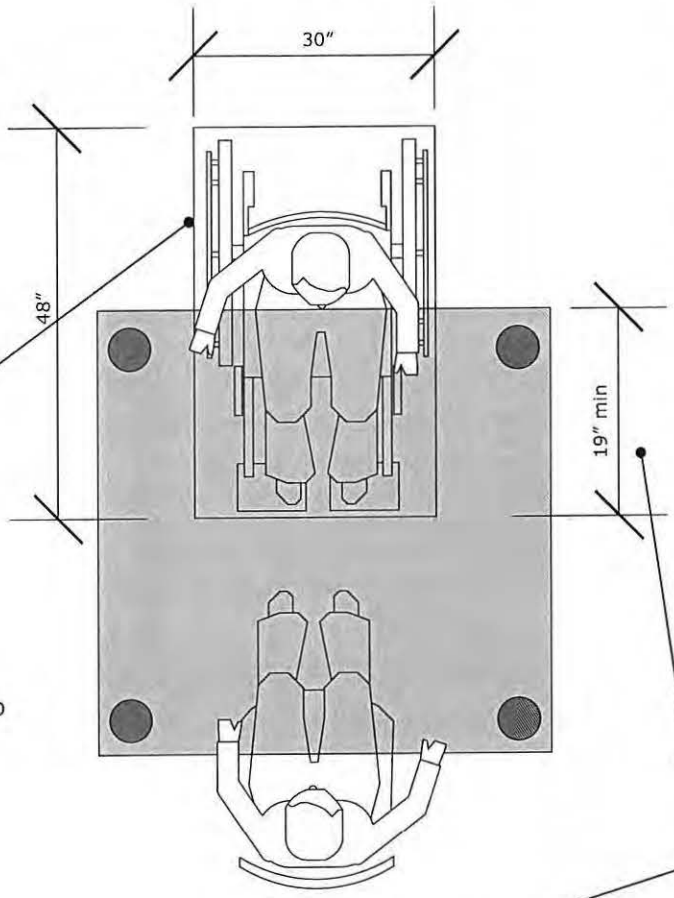

Required Accessible Tables
1104B.5, 1122B.1, *226*
-***At least*** 5% (but never less than 1) of tables, seating, counters, and/or dining surfaces must be accessible
-Where there is more than 1 accessible space, these spaces must be dispersed throughout the area or facility where dining surfaces are provided
-Where there are multiple functional areas (i.e. bar and dining room), there must be at least 1 accessible space for each area

Note:
-It is important to be able to arrange non-fixed tables to accommodate larger groups with people with disabilities in their party

Clear Floor Space at Table
1122B.2
-30"x 48" min. clear floor space at table, may overlap the knee clearance under the table by 19"

Knee Space
1122B.3, *902*
-27" min. from finished floor to underside of table (***Best Practice:*** 29" preferred)
-30" min. clear width under table
-19" min. clear depth under table (may overlap the 30"x48" clear floor space required at table for wheelchair)

Center Post Table Base

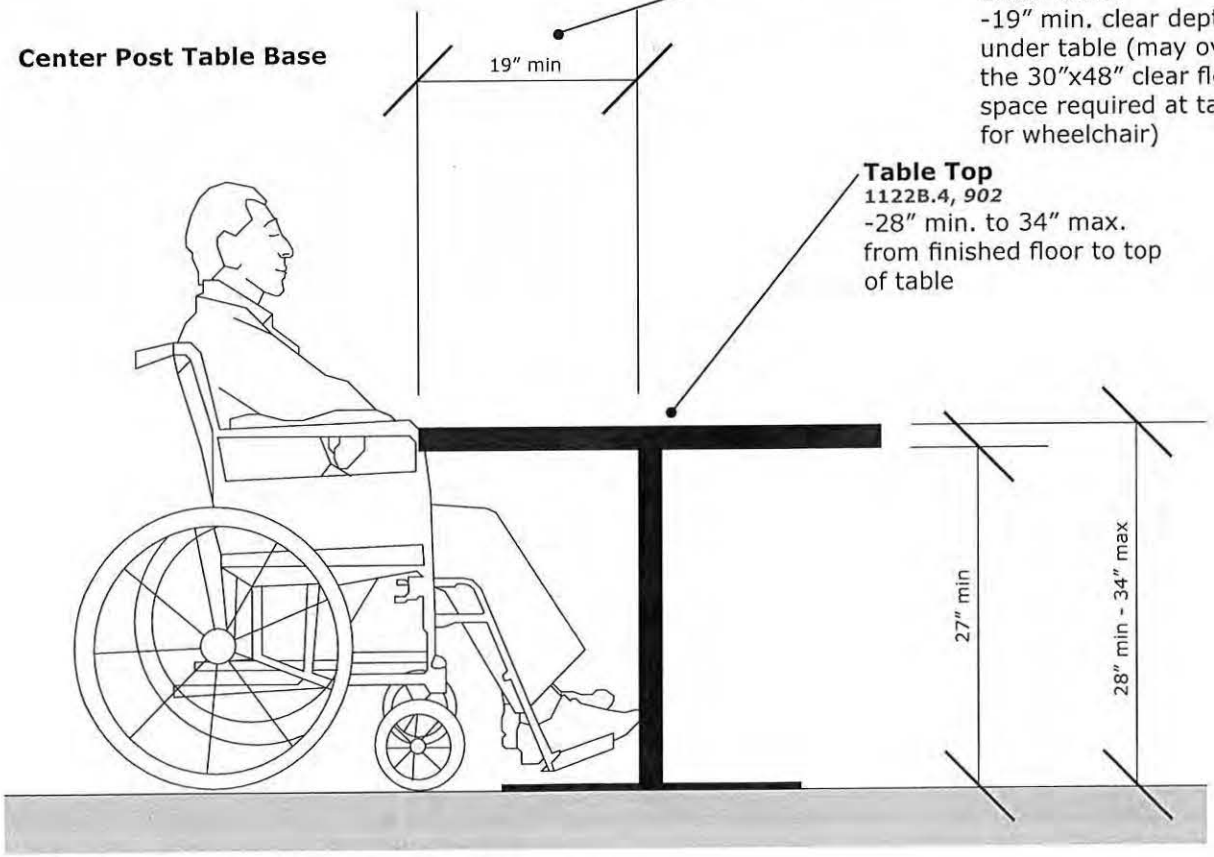

Table Top
1122B.4, *902*
-28" min. to 34" max. from finished floor to top of table

© June 2012 Designing Accessible Communities. All rights reserved.

Banquette Seating

Note:
-It is important to be able to arrange non-fixed tables to accommodate larger groups with people with disabilities in their party

Booth Seating with Center Post Table Base

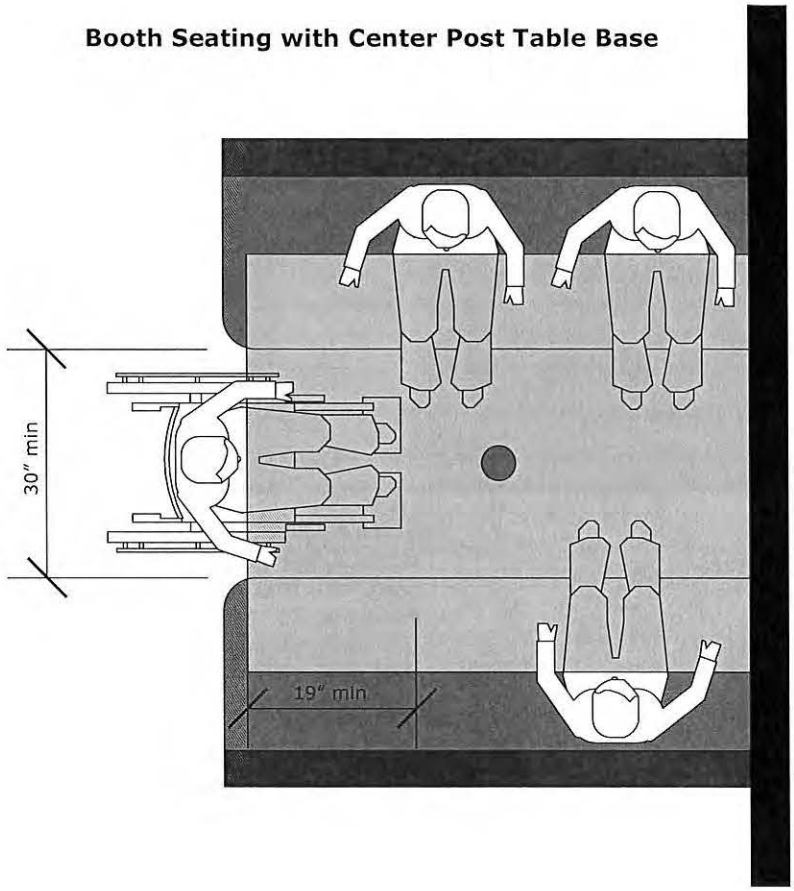

Clear Floor Space at Table
1122B.2
-30"x 48" min. clear floor space at table, may overlap the knee clearance under the table by 19"

Sled (or T) Table Base

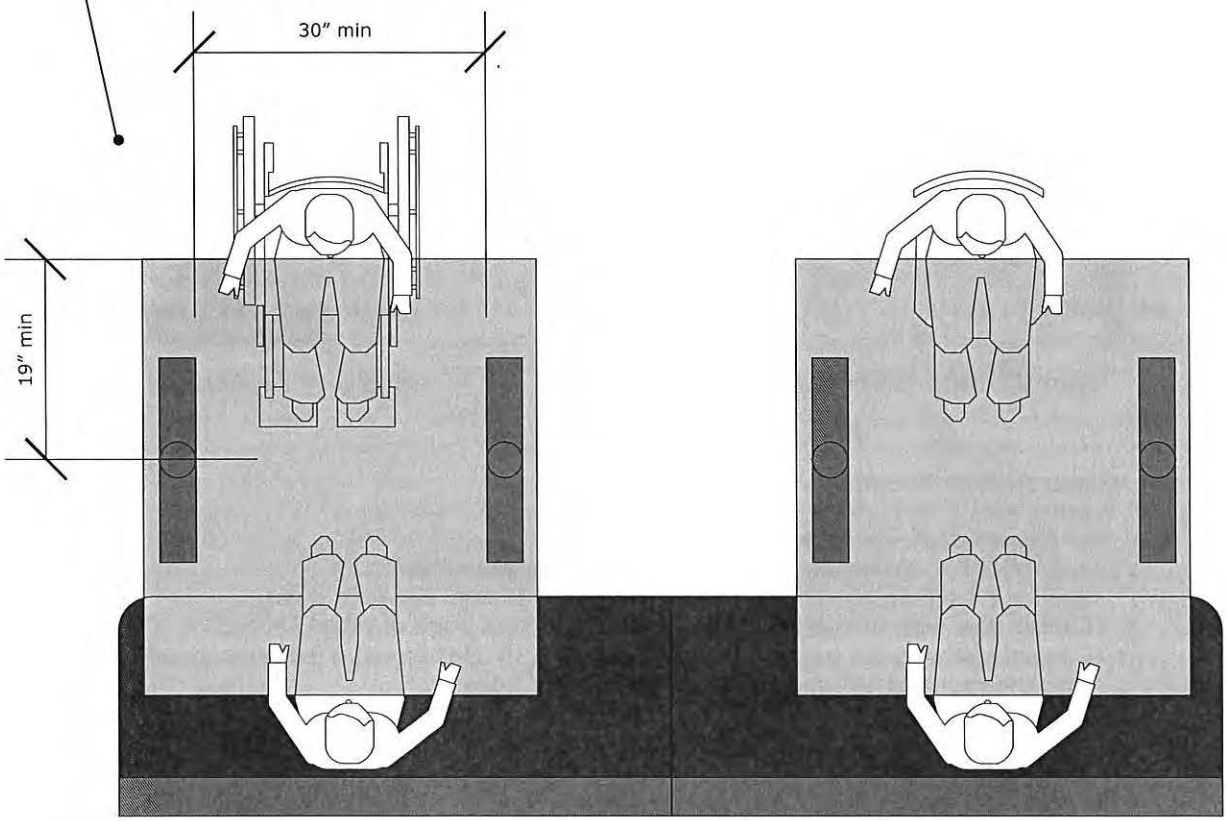

© June 2012 Designing Accessible Communities. All rights reserved.

Table Bases

***Non-Accessible* X Base**

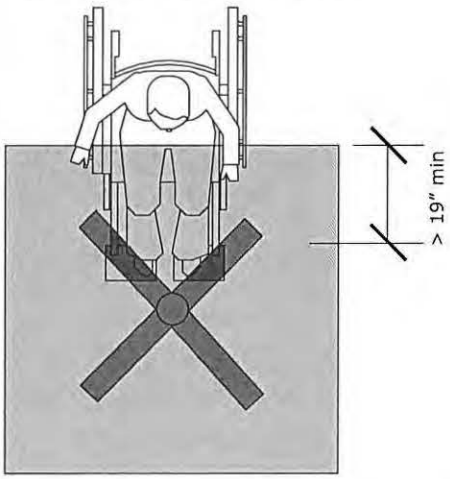

Center Post Table Base

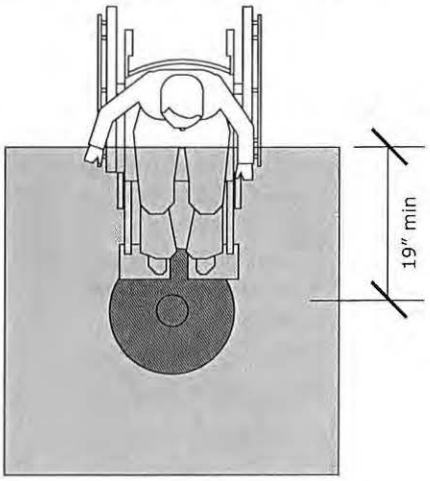

Bolt-Down Center Post Table Base

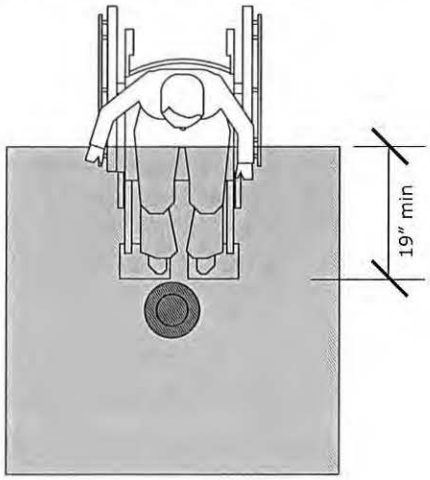

Knee Space

1122B.3, *902*

-27" min. from finished floor to underside of table (***Best Practice:*** 29" preferred)
-30" min. clear width under table
-19" min. clear depth under table (may overlap the 30"x48" clear floor space required at table for wheelchair)

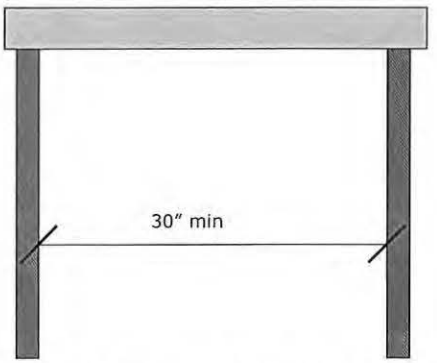

Four Corners Table Base

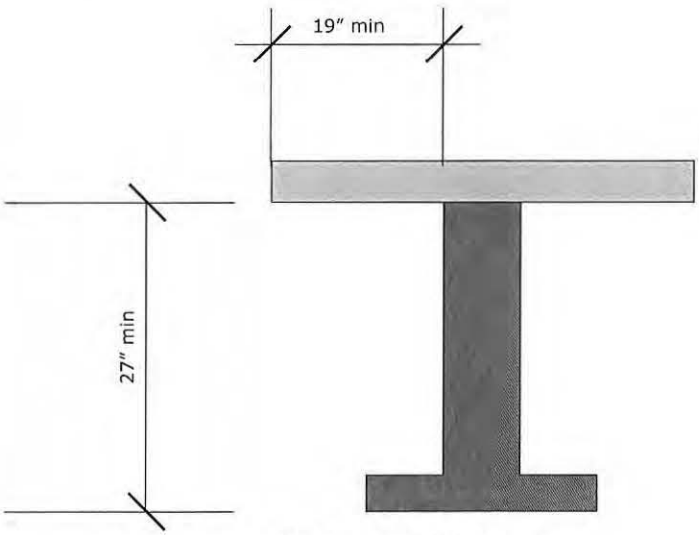

Sled or T Table Base

General/*Best Practice*

1122B.3, *902*

-The following are considered ACCESSIBLE bases:
  -Legs in the 4 corners with at least 30" min. between them
  -Sled or T base on two sides of the table with 30" min. between them
  -Center post with bolt-down base, at least 19" from edge of table
  -Center post with flat base of 1/2" thick max. with 1/4" bevel, if flat base extends into the required 19" clear space from edge of table
-Do NOT use X-shaped table base, as it interferes with the 19" min. clear space from edge of table and may cause wheelchair footrests to become stuck (shown in red above)
-Do NOT use center post with thick or sloped bases that extend into the required 19" min. clear space from the edge of the table, as this will prevent a person using a wheelchair from being able to sit comfortably at the table, or may cause their wheelchair to tip back

© June 2012 Designing Accessible Communities. All rights reserved.

Bar/Counter Seating

Bar/Counter Width
1104B.5.4
-60" min.

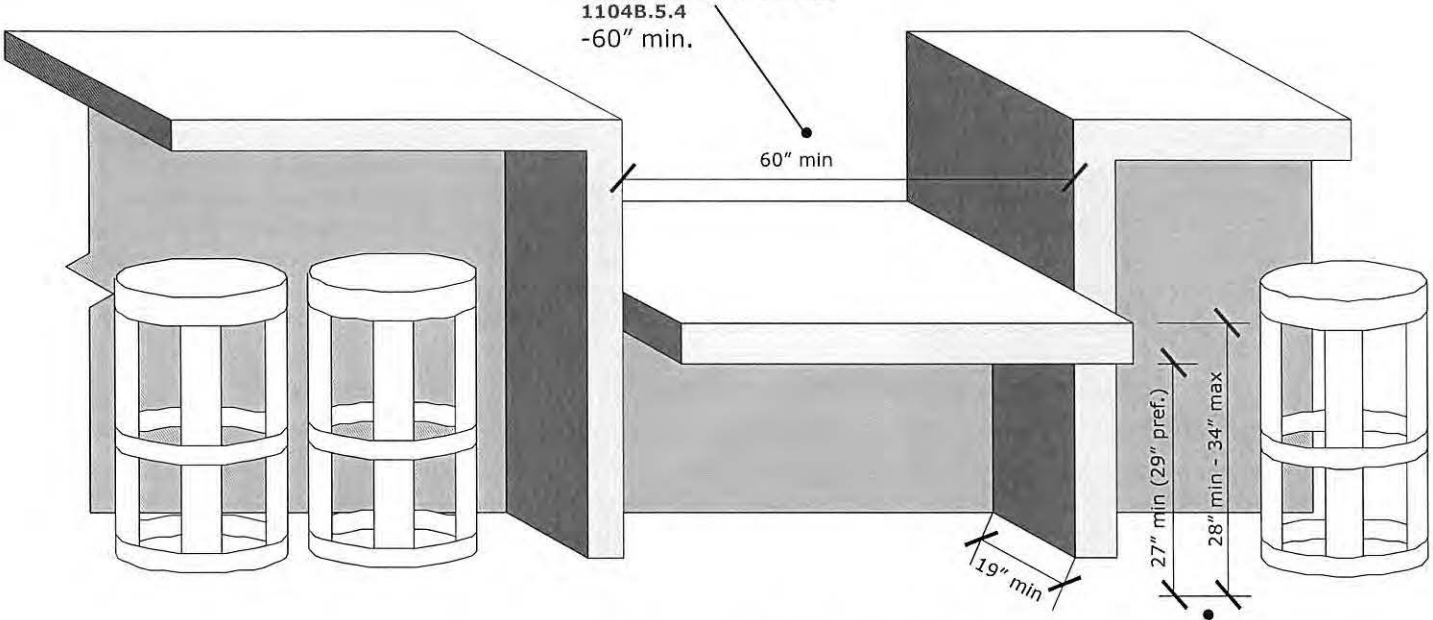

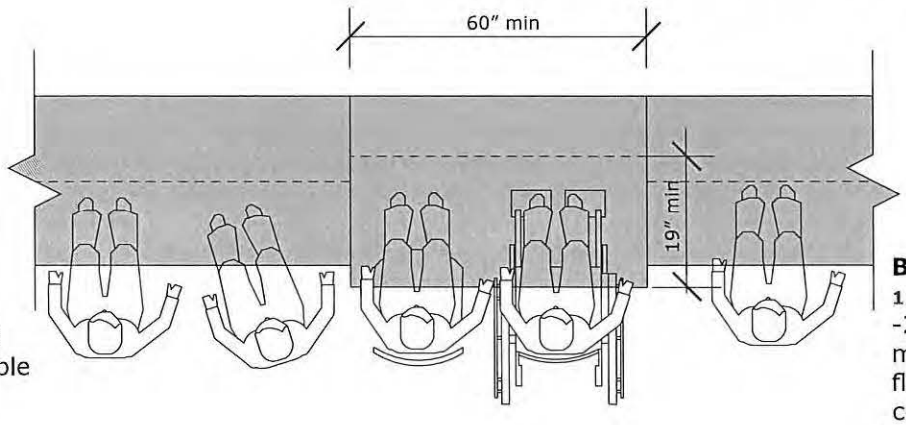

Knee Space
1122B.2, *306.3*
-27" min. from finished floor to underside of table (29" preferred)
-30" min. clear width under table
-19" min. clear depth under table (may overlap the 30"x48" clear floor space required at table for wheelchair)

Bar/Counter Top
1122B.4, *902.4.2*
-28" min. to 34" max. from finished floor to top of bar/counter
-Must extend full depth of bar/counter
-Do NOT use as service area

Required Accessible Tables
1104B.5, 1122B.1, *226*
-***At least*** 5% (but never less than 1) of tables, seating, counters, and/or dining surfaces must be accessible
-Where there is more than 1 accessible space, these spaces must be dispersed throughout the area or facility where dining surfaces are provided
-Where there are multiple functional areas (i.e. bar and dining room), there must be at least 1 accessible space for each area
-A drop-down hinged counter surface does not count as an accessible space, counter must be same height from customer side to employee side

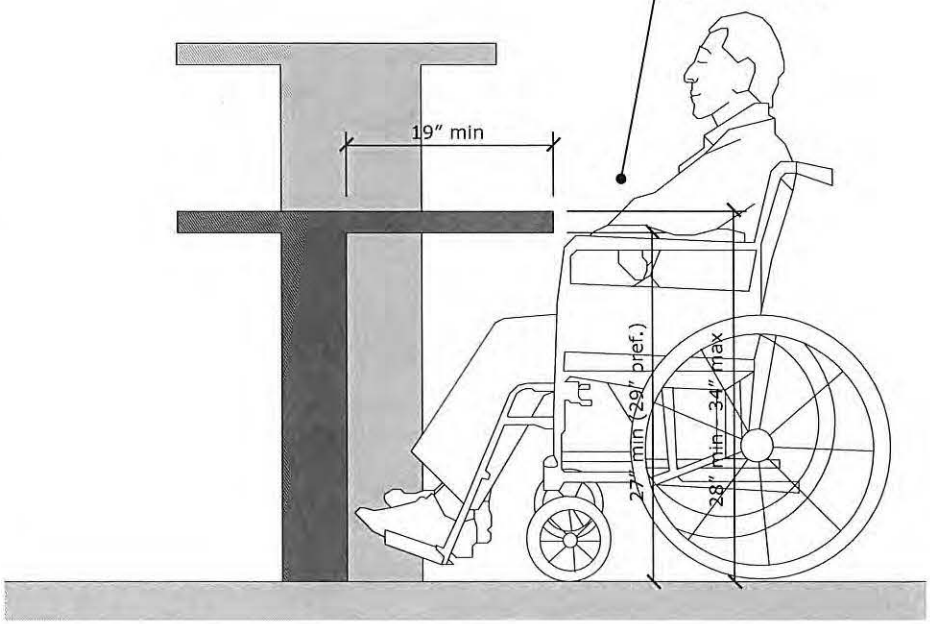

© June 2012 Designing Accessible Communities. All rights reserved.

Path of Travel (Interior)

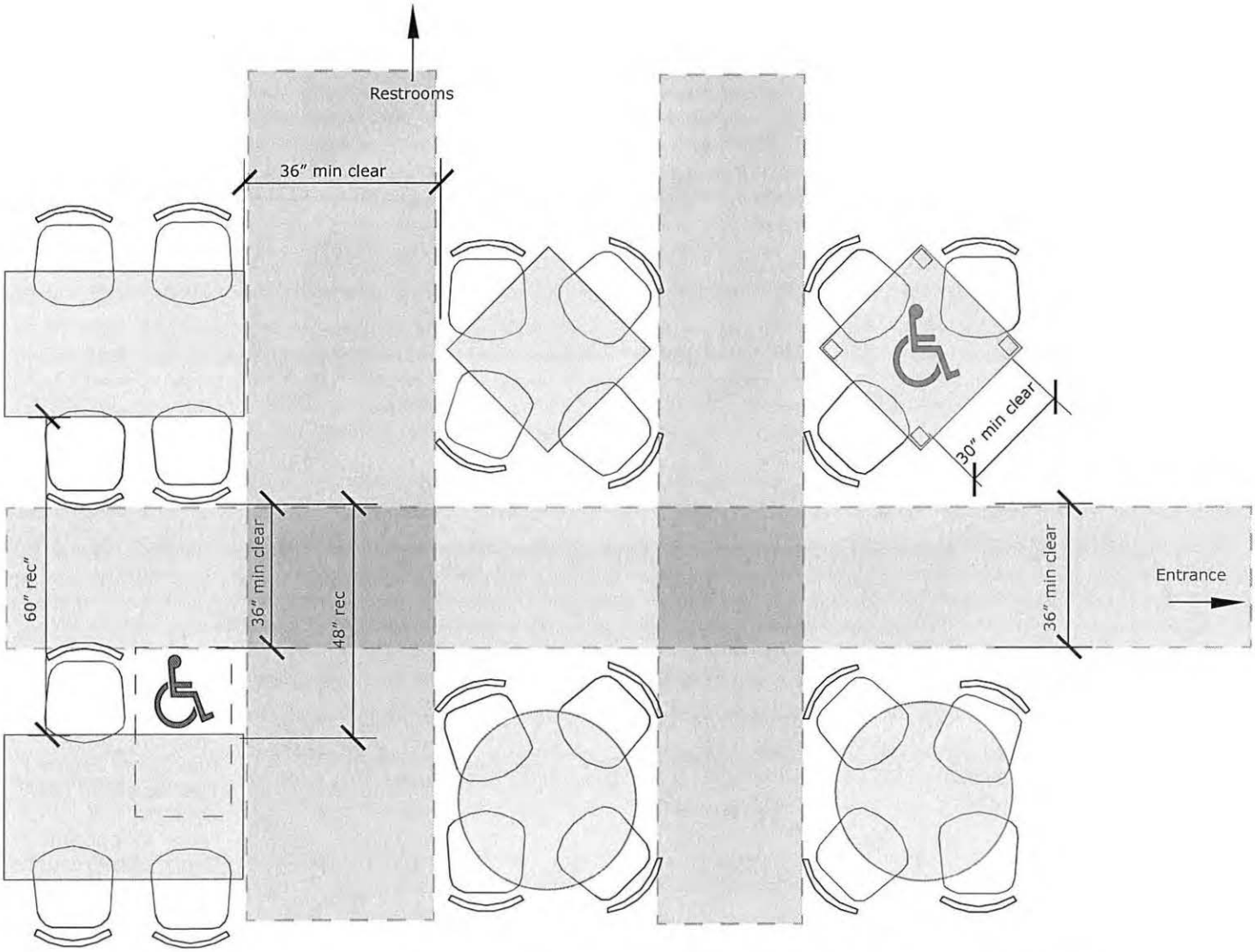

Clear Path To and Between Tables
1104B.5.4, 1133B.6, *403.5.1*
-36" min. clear width between tables, seats, and other obstacles, ***even with patrons seated at tables,*** from entrance, through dining area, to accessible restrooms

Best Practice: **Employee Training**
-Accessible seating should be the last seating filled to ensure its availability for customers with disabilities
-Moveable furniture positions must be maintained regularly, even when restaurant is busy

© June 2012 Designing Accessible Communities. All rights reserved.

Sample Seating Chart

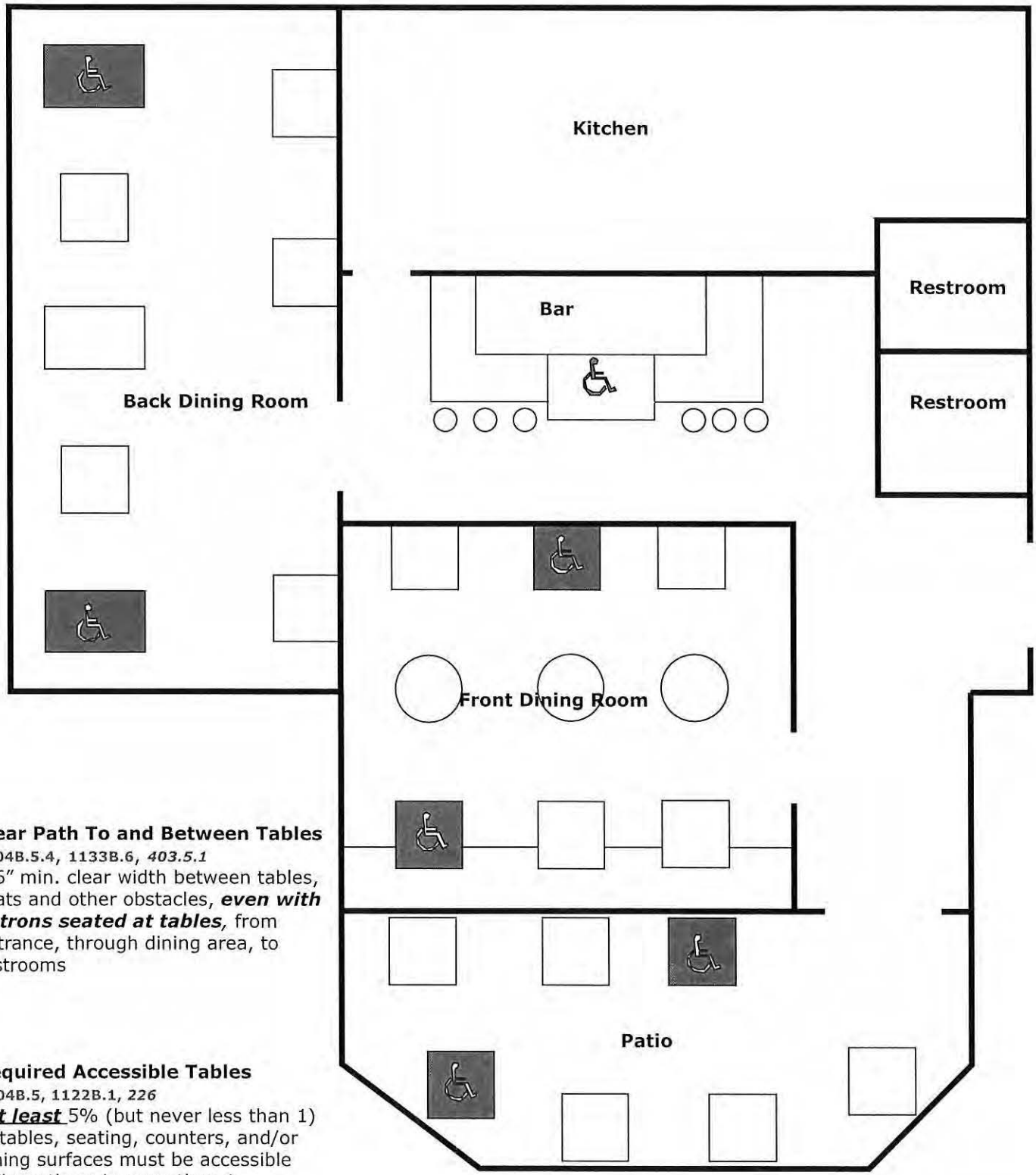

Clear Path To and Between Tables
1104B.5.4, 1133B.6, *403.5.1*
-36" min. clear width between tables, seats and other obstacles, ***even with patrons seated at tables,*** from entrance, through dining area, to restrooms

Required Accessible Tables
1104B.5, 1122B.1, *226*
-***At least*** 5% (but never less than 1) of tables, seating, counters, and/or dining surfaces must be accessible
-Where there is more than 1 accessible space, these spaces must be dispersed throughout the area or facility where dining surfaces are provided
-Where there are multiple functional areas (i.e. bar and dining room), there must be at least 1 accessible space for each area

Best Practice: **Employee Training**
-Accessible seating should be the last seating filled to ensure its availability for customers with disabilities
-Moveable furniture positions must be maintained regularly, even when restaurant is busy

© June 2012 Designing Accessible Communities. All rights reserved.

Contacts

US Access Board
http://www.access-board.gov/
1331 F Street NW, Suite 1000
Washington, DC 20004-1111
(202) 272-0080
For Guidance on Accessibility Issues:
800.872.2253
800.993.2822 (TTY)

US DOJ - Civil Rights Division
http://www.justice.gov/crt/
950 Pennsylvania Avenue, NW
Washington, DC 20530-0001
202.514.4609
202.514.0716 (TTY)

ADA Information Line
http://www.ada.gov/
800.514.0301
800.514.0383 (TTY)

California DOJ
http://oag.ca.gov/
Attorney General's Office
California Department of Justice
Attn: Public Inquiry Unit
P.O. Box 944255
Sacramento, CA 94244-2550
916.322.3360
800.952.5225
TTY/TDD Dial 711 or 800.735.2929

California DSA (Department of the State Architect)
http://www.dgs.ca.gov/
1102 Q Street, Suite 5100
Sacramento, CA 95811
916.445.8100
Manager, Access Compliance 916.445.8100

California Restaurant Association
http://www.calrest.org/
621 Capitol Mall, Suite 2000
Sacramento, CA 95814
800.765.4842
916.447.5793

Golden Gate Restaurant Association
http://ggra.org/
100 Montgomery Street, Suite 1280
San Francisco, CA 94104
415.781.5348

Designing Accessible Communities
http://www.designingaccessiblecommunities.org/
PO Box 2579
Mill Valley, CA 94942
415.388.7206

© June 2012 Designing Accessible Communities. All rights reserved.

CHECKLIST

FEATURE	REQUIREMENT	YES/NO	NOTES
PARKING (p. 7)			
# of Accessible Spaces	1 per 25 spaces (1-100 spaces), +1 per 50 additional spaces (101-200 spaces), +1 per 100 spaces (201-500 spaces) 2% (501-1000 spaces) 20, +1 per 100 or fraction thereof over 1000 (1001+ spaces)		
Accessible Spaces	Identified by 36" x 36" blue square with ISA in white		
Van Accessible Spaces	Min. 1 per 6 accessible spaces provided If only 1 accessible space provided, must be van accessible.		
Accessible Space Dimensions	9' wide min. (measured to centerline of striping) x 18' long min.		
Access Aisle	5' wide min. x full length of space May be shared by two spaces, on passenger side if only 1 space Keep free of obstructions Use min. slope possible, not to exceed 2% in any direction Shall be marked with a blue border Shall be striped (blue or white preferred) with "No Parking" in 12" min. hight white bold lettering		
Van Access Aisle	8' wide min. x full length of space On passenger side of space only Keep free of obstructions Use min. slope possible, not to exceed 2% in any direction Shall be marked with a blue border Shall be striped (blue or white preferred) with "No Parking" in 12" min. high white bold lettering		
Vertical Clearance	98" min. at accessible parking spaces and along at least one vehicle access route to these spaces to allow van clearance		
Parking Signage:			
Space Signage	70 sq. in. min. Posted at 80" min. to bottom of sign Shall contain ISA and lettering in white on blue background Additional language/sign stating "Minimum Fine $250"		
Van Accessible Signage	Same as above, with additional language/sign stating "Van Accessible"		
Lot Signage	Placed conspicuously near parking lot entrance or immediately adjacent to and visible from each accessible stall Min. 17" x 22" with 1" high lettering, black on white background Wording: "Unauthorized vehicles parked in designated accessible spaces not displaying distinguishing placards or special license plates issued for person with disabilities will be towed away at the owner's expense. Towed vehicles may be reclaimed at (fill in blank with towing company name and address) or by telephoning (fill in blank with towing company phone number)."		

© June 2012 Designing Accessible Communities. All rights reserved.

Feature	Requirement	Yes/No	Notes
CURB RAMPS (p. 8-9)			
Width	48" wide min.		
Slope	1:12 max slope on ramp 1:10 max slope on flared sides		
Detectable Warnings	See Detectable Warnings below		
Edge Grooves/Border	All curb ramps shall have a grooved border 12" wide at the level surface of the sidewalk along the top and each side 1/4" grooves shall be approx. 3/4" on center		
Level Landing	4' deep minimum level landing at top of curb ramp for full width of ramp		
DETECTABLE WARNINGS (p.10)			
Base of Domes	Nominal .9" diameter		
Top of Domes	Nominal .45" diameter		
Distance Between Domes	Nominal 2.35" on center		
Arrangement	Rectangular pattern (not offset)		
Measurements	Extend full width and depth of curb ramp, excluding flared sides, inside grooved border		
Visual	Contrast visually with adjoining surfaces (yellow typical)		
RAMPS (p. 11-12)			
Slope	An accessible route with a slope greater than 1:20 is considered a ramp Use least possible slope, 1:12 max.		
Wheel Guide Rail or Curb	2" - 4" wide guide rail, 2" - 4" AFF to CL OR 2" min. height AFF curb Full length of ramp when handrails are not wall mounted, must provide smooth edge along inside of ramp		
Handrails	See Handrails below		
Landings:			
Level Landings	Less than 1:50 slope on level landings Alll landings must be level 30' max. run between landings (30" max. rise)		
Bottom	Full width of ramp (48" min. clear width) 72" min. length		
Intermediate	**On straight ramp:** 60" min. length, full width of ramp **On switchbacks (greater than 30°):** 72" min. lenth in direction of ramp run, full width of all ramp runs adjacent to landing **On Change of Direction (greater than 30°):** 72" min. length in direction of ramp run, 72" min width		
Top	Min. 60" x 60" level landing		
HANDRAILS (p. 13-14)			
Height	34" - 38" to top of handrail, consistent along entire run of ramp or flight of stairs Continuous on both sides of ramps or stairs		
Cross Section of Grip Portion	1-1/4" to 1-1/2"		
Distance from Wall	1-1/2"		
Wall Surface	Smooth surface behind handrails to prevent injury		

© June 2012 Designing Accessible Communities. All rights reserved.

Feature	Requirement	Yes/No	Notes
Returns	12″ horizontal section at top of ramp or stairs, return to floor, wall, or handrail At bottom of ramp, 12″ min. horizontal section before returning to floor, wall, or handrail At bottom of stairs, extend rail at slope 1 tread width beyond bottom stair, then 12″ min. horizontal section before returning to floor, wall, or handrail		
STAIRS			
Riser	4″- 7″ high No open risers Vertical or 30° max.		
Tread	11″ deep		
Consistency	Consistent height and depth for entire flight of stairs		
Handrails	See Handrails above		
Nosings	1/2″ max. radius 1/2″ max. bevel OR Projected 1-1/4″ max. past back of tread below, with underside curved or beveled at 30° max.		
DOORS, VESTIBULES, & CORRIDORS (p. 17-20)			
Entry Door	5 lbs. force max.		
Fire Doors	Up to 15 lbs. force (use lowest force possible)		
Revolving Doors	Not permitted on an accessible route		
Height	6′-8″ min.		
Width	36″ min.		
Kickplate	Bottom 10″ min. from floor must be a smooth, uninterrupted surface on push side		
Hardware	Mounted at 34″ to 44″ AFF Must be operable with one hand, with no tight grasping, pinching, or twisting of the wrist		
Opening	32″ min. clear when door is open 90°		
Maneuvering Clearance	60″ min. on pull side of door 48″ min. on push side of door		
Pull Side Clearance	18″ min. on strike side (interior doors) 24″ min on strike side (exterior doors) (24″ min. preferred)		
Push Side Clearance	12″ min. on strike side if door is equipped with both a latch and a closer		
Threshold	1/4″ max. height AFF without bevel 1/2″ max. height AFF with 1:2 sloped bevel between 1/4″ and 1/2″ height		
Vestibule-Doors Swing in Same Direction	48″ min. between doors (when door swinging into space is open 90°) 44″ min. clear width of corridor		
Vestibule- Doors Swing Out	48″ min. between doors 44″ min. clear width of corridor		
Corridors (longer than 200′)	60″ min. clear width		
Corridors (shorter than 200′)	44″ min. clear width Provide a 60″ min. diamter circle for turning around every 200′ min.		

© June 2012 Designing Accessible Communities. All rights reserved.

Feature	Requirement	Yes/No	Notes
FIRE ALARM PULL STATIONS (p. 21)			
Operable Parts	Operable with one hand, with no tight grasping, pinching, or twisting of the wrist 5 lbs. max. force to operate		
Clear Floor Space	30" x 48" min. clear floor space adjacent to fire alarm pull station on an accessible path		
Mounting Height	15" min. to 48" max. AFF to operable parts		
General	Located in normal path of exit At least one station on each floor Not more than 200' to nearest station from any point in the building		
ELEVATORS (p. 22-24)			
Hall Call Buttons	42" AFF to CL of hall call buttons Buttons 3/4" min. smallest dimension, raised 1/8" Button designating "up" on top, "down" on bottom Internally illuminated white over entire surface Best Practice: leave a 30" x 48" min. clear floor space adjacent to the hall call buttons		
Hall Lantern	Visual and audible signal at each elevator entrance Visual signal 2-1/2" x 2-1/2" min. and visible from near call buttons Audible signal sounds once for "up" and twice for "down," or may announce verbally 72" min. AFF to CL Audible signal for each floor passed		
Floor Indication	On both door jambs on each floor Indicate floor using raised characters 2" high and Braille Main entry level indicated by a raisted star, raised number, and "Main" in Braille 60" min. AFF to CL		
Width	68" min. (side door car) 80" min. (center door car)		
Depth	51" min. from rear wall to front wall 54" min. from rear wall to door		
Handrails	Provide on one wall of elevator car, rear wall preferred 1-1/2" from wall surface 32" AFF		
Destination Based Elevator Systems	Best Practice: do not use destination based elevator systems that do not provide accessibility for all pepole, including those with visual or cognitive disabilities		
Controls	Locate on front wall next to door or, in side opening cars, on side wall adjacent to door Button size: 3/4" min., raised 1/8" 3/8" min. spacing between buttons and nearest tactile item 5/8" min. high raised characters immediately to the left of buttons, with Braille directly below White on black background 48" max. AFF to CL of highest button		
Emergency Phone	15" min. - 48" max. AFF to CL of highest operable part When phone is in an enclosure, ensure that the opening mechanism does not require tight grasping, pinching, or twisting of the wrist to operate		

© June 2012 Designing Accessible Communities. All rights reserved.

Feature	Requirement	Yes/No	Notes
WHEELCHAIR LIFTS (p. 25)			
Landings	60" x 60" min. level landings at top and bottom of lift		
Platform	48" x 32" min. platform		
Doors	32" min. front door, 42" min. side door Use of a platform lift cannot require that a person using a wheelchair back out of the lift unless there is a power operator on the doors		
Maintenance	Platform lifts shall have a yearly service contract, with a signed & dated log of weekly tests Platform lifts shall provide a self-recharging battery backup in case of power failure Inlcude an emergency phone in all platform lifts (See Emergency Phone under Elevators above)		
EMERGENCY EVACUATION SIGNS (p. 26)			
General	Make the info available to everyone, regardless of ability Use raised characters, duplicated in Braille Posted at all required exit stairs, every elevator landing, and inside public entrances		
Mounting Height	48" min. AFF to baseline of lowest tactile element 60" max. AFF to baseline of highest tactile element		
Visually Printed Information	Non-glare finish Contrast light-on dark or dark-on-light 40" min. AFF		
Tactile Information	Use contracted (Grade 2) Braille that duplicates the visual information, below the corresponding text Separated by 3/8" min. from any other tactile character, raised border or decorative element		
Raised Characters	1/32" min. raised above background Uppercase Sans serif font Height of characters 5/8" min. to 2" max.		
Restroom Signs (p. 27-28)			
Room ID Sign	60" AFF to CL of pictogram area on sign 60" max. AFF to baseline of highest tactile character 6" min. pictogram area outside dimension, accompanies by text and Braille description directly below **Text:** 5/8" min. character height (2" max.), raised 1/32" min., sans serif upper case characters **Braille:** Contracted (Grade 2) Braille, dots 1/10" apart on center in each cell, 2/10" space between cells, dots raised 1/40" min. Characters and symbols contrast with background		

© June 2012 Designing Accessible Communities. All rights reserved.

Feature	Requirement	Yes/No	Notes
Geometric Symbols	Geometric sybmol shall contrast door (light-on-dark or dark-on-light, blue background with white symbols is typical) Geometric symbols whould be placed at ALL restrooms to identify gender ISA only used at accessible restrooms Corners have min. 1/8" radius Ease edges of sign 1/4" thick **Men's Room:** Equilateral triangle, 12" long edges, vertex pointing up **Women's Room:** Circle, 12" diameter **Unisex Room:** Equilateral triangle, vertex pointing up, on top of and within the boundaries of a 12" diameter circle Best Practice: do not put raised characters, symbols or Braille on geometric symbols		
Placement	Geometric symbol shall be placed along the horizontal centerline of restroom door Room ID sign and geometric symbol centerlines at 60" AFF Room ID sign 3" min. outside door swing on wall on latch side of door		
TOILET FACILITIES (p. 29-36)			
Number of Acc. Stalls	Min. 1 wheelchair accessible stall Where there are 6+ stalls and/or urinals, provide at least 1 ambulatory accessible stall		
Clear Path	Min. 44" wide clear path from entrance to all accessible features		
Wheelchair Accessible Stall	Provide grab bars on side and rear walls 18" to CL of toilet from side wall Flush controls on wide side of toilet **Side Entry Stall:** 60" min. width from side wall 60" min. depth from rear wall 34" min. door at 4" max. from hinge to wall **End Entry Stall:** 60" min. width from side wall 56" min. (wall hung toilet) or 59" min. (floor mounted toilet) depth from rear wall 32" min. door at 4" max. from hinge to wall		
Ambulatory Accessible Stall	60" min. depth from rear wall 36" width between side walls or partitions Provide grab bars on both side walls/partitions 32" min. door		
Urinals	Where more than 1 urinal is provided, at least 1 urinal shall be accessible 17" max. AFF to top of rim (wall mounted) 14" - 17" depth from wall to outer surface of rim (wall or stall type urinal) Flush controls shall be 44" max. AFF 30" x 48" clear floor space in front of urinal for a front approach		

© June 2012 Designing Accessible Communities. All rights reserved.

Feature	Requirement	Yes/No	Notes
Grab Bars	**Side:** 42" min. length 12" max. from rear wall to near end of grab bar 54" min. from rear wall to far end of grab bar 33" AFF to CL **Rear:** 36" min. length 12" min. on one side of CL of toilet, 24" min. on other side 33" AFF to CL (may go up to 36" if toilet tank interferes with mounting height on rear grab bar only)		
Fixtures	**Hooks**: 48" AFF to hights operable part, side wall preferred Toilet Seat Cover Dispenser: 40" max. to operable part, do not place behind toilet **Toilet Paper Dispenser:** 36" max. from back wall to front end of dispenser 7" - 9" from front of toilet to CL of dispenser 19" min. AFF to CL of dispenser, mounted below grab bar, do not use large dual roll dispensers **Other fixtures (i.e. Paper Towel Dispensers, Hand Dryers, Trash Cans, Sanitary Napkin/ Tampon Dispensers, etc.):** Where provided, at least one of each type must be on an accessible route, and have all operable parts, including coin slots, mounted at 44" max. AFF Fixtures with lowest edge between 27" and 80" must not protrude more than 4" from wall Best Practice: Use recessed, semi-recessed, or slimline fixtures Best Practice: Use fixed trash cans to keep accessible routes clear		
LAVATORIES (p. 37-38)			
General	Min. 5% (but not <1) of lavatories must be accessible 40" max. AFF to bottom of mirrors placed above lavatories		
Mounting Height	34" max. to top of lavatory/counter		
Knee Clearance	29" min. AFF at front of lavatory or counter 27" min. AFF (29" recommended) at 8" deep from front of lavatory/counter		
Toe Clearance	9" min. high at 6" max. from wall		
Protected Pipes	Insulate or cover all hot water and drain pipes		
Clear Floor Space	30" x 48" min. clear floor space in front of lavatories		
Depth	17" min. from back wall to front of lavatory/ counter 11" min. depth of knee clearance before toe clearance		
Faucet/Controls	Operable with one hand, with no tight grasping, pinching, or twisting of the wrist Max 5 lbs. of force to operate 25" max. reach from font of lavatory or coutner to front of controls Use a temperature control valve to keep water from reaching scalding temperatures		
Distance from Wall/Partition	18" min.		

© June 2012 Designing Accessible Communities. All rights reserved.

Feature	Requirement	Yes/No	Notes
TELEPHONES (p. 39)			
Number of Accessible Phones	Min. 50% (but not <1) of public phones must be accessible		
TTY	Where there are 4+ public phones, provide at least 1 TTY with appropriate signage If on shelf adjacent to phones, 34" AFF to top of shelf, with 27" min. knee clearance beneath		
Mounting Height	48" max. to highest operable part		
Clear Floor Space	30" x 48" clear floor space for front or side approach		
Volume Control	At least 25% (but not <1) of public phones must have volume control with appropriate symbol		
ISA	Place white ISA pictogram on blue background at all accessible phones		
PROTRUDING OBJECTS (p.40)			
Protrusion Limits	4" max. protrusion for all objects whose leading edge is between 27" and 80" AFF		
Vertical Clearance/Headroom	80" min. clear AFF Where it is less than 80", provide a guardrail or barrier at 27" max. AFF		
Post-Mounted Objects	Free-standing post-mounted objects may overhang 12" max. when they are between 27" and 80" AFF		
Double Post-Mounted Objects	When a sign or object is mounted between 2 postes 12" or more apart, the lower edge shall be 27" max. or 80" min. AFF		
REACH RANGES (p. 41)			
Side Reach	48" max. AFF 15" min. AFF 30" min. clear floor space 10" max. from wall/operable parts		
Side Reach, Obstructed	46" max. AFF for an obstruction 24" max. deep x 34" max. high		
Front Reach	48" max. AFF 15" min. AFF 48" min. clear floor space		
Front Reach, Obstructed	48" max. AFF if obstruction is < 20" deep 44" max. AFF if obstruction is 20" - 25" deep Obstruction: 25" max. deep x 34" max. high		
DINING & BAR SEATING (p. 42-44)			
Required # Accessible	At least 5% (but never < 1) of all tables, seating, counters, bars, and/or dining surfaces must be accessible Where there is more than 1 accessible space, these spaces must be dispersed throuout the area or facility Where there are multiple functional areas (i.e. bar and dining room), there must be at least 1 accessible space per area		
Clear Floor Space	30" x 48" min. clear floor space at each accessible seating spot		
Tables	28" min. to 34" max. AFF to table top 27" min. (29" preferred) knee clearance under table 30" min. clear width under table 19" min. clear depth		

© June 2012 Designing Accessible Communities. All rights reserved.

Feature	Requirement	Yes/No	Notes
Banquette Seating	30" x 48" min. clear floor space 28" min. to 34" max. AFF to table top 27" min. (29" preferred) knee clearance under table 30" min. clear width under table 19" min. clear depth		
Bar/Counter Seating	Must provide min. 60" long lowered counter/ bar section that extends from employee side to customer side 19" min. deep x 27" min. (29" preferred) high knee clearance 28" min. to 34" max. AFF to top of bar/counter		
PATH OF TRAVEL (p. 45)			
Clear Path	36" min. clear width path between tables, seats, and other obstacles, even with patrons seated at tables, from entrance, through dining area, to accessible restrooms Train employees to keep this path clear at all times		
SEATING CHART (p.46)			
Accessible Seating	Dispersed throughout facility At least one accessible seating space per functional area Train employees to fill accessible spaces last, to ensure their availability		
MENUS			
Menus in alternate formats	Braille, Large Print, Pictorial, Sign Language, High Contrast, Read aloud, Language other than English		
OTHER			

© June 2012 Designing Accessible Communities. All rights reserved.

Designing Accessible Communities

Richard Skaff, Executive Director
PO Box 2579, Mill Valley, CA 94942
DAC is a 501(c)3 Non-Profit Organization.

www.designingaccessiblecommunities.org
Voice and Fax: 415.388.7206 California Relay Service – Dial 711
richardskaff@designingaccessiblecommunities.org
© 2012

7) Vision of Deliverable

a) Samples of different styles of checklists:

iii) Restaurant Association Health and Food safety checklist

join now

Become a member & get immediate access to all of our resources.

take the free tour

about us

Who Should Join
Contributors
Download Resources
Member Benefits
Open a Restaurant
Privacy Policy
Terms of Use
Member Comments
FAQ

members only discussion forum

departments

Business & Financial
Business Plans
Restaurant Accounting
Food & Beverage
Staffing
Bar Management
Menu
Customer Service
Marketing
Social Media/Web 2.0
Startup & Growth
Technology

now playing profit building online seminars

member resources

DOWNLOAD: Restaurant Checklists

Use the restaurant checklists as a guide for deciding what should be happening in every area of your restaurant to create the quality products, dining experience and operating results you expect. They will help you get organized and become aware of the essential tasks, procedures and practices that need to be performed in each area of your restaurant.

Modify each checklist to reflect your own specific procedures, practices and systems. Then use the checklists to periodically review your operation to determine whether the tasks are being performed correctly, consistent with the procedures and practices you've established.

Each checklist comes in a rich text format (.RFT) file format and can easily be modified in any work processing software to reflect your own unique operating standards and practices.

Restaurant Operations Checklists:

- Customer Service Checklist
- Purchasing Checklist
- Receiving Checklist
- Storage Checklist
- Preparation Checklist
- Cleaning Checklist (kitchen & storage)
- Bartender's Checklist (bar opening, shift change, closing & cleaning)
- Manager's Opening Checklist
- Manager's Shift Change Checklist
- Manager's Closing Checklist
- Server Sidework Checklist
- Catering Delivery Checklist

Training, Personnel & Other Checklists:

- Server Training Checklist
- New Hire Checklist
- New Employee Orientation Checklist
- Employee Pre-Termination Checklist
- Employee Termination Checklist
- Restaurant Internal Controls Checklist
- Restaurant Accounting Checklist

7) Vision of Deliverable

a) Samples of different styles of checklists:

v) Evan Terry Associates

Notes:

a 1 per floor. [4.1.3(17)(a)]

b 1 per floor, when 1 bank is provided on this floor [4.1.3(17)(a)]

c 1 per bank, when 2 or more banks are provided on this floor. Accessible unit may be installed as a single unit in proximity (either visible or with signage) to the bank. [4.1.3(17)(a)]

d 1 per bank, when 2 or more banks are provided. Accessible unit may be installed as a single unit in proximity (either visible or with signage) to the bank.

e 1 per floor.

f 1 per bank, when 2 or more banks are provided. If, in an exterior location, and dial tone first service is available, then a side reach telephone may be installed instead of the required forward reach telephone. [4.1.3(17)(a)3]

g 1 interior, if the total number of public pay telephones at a site (including both interior and exterior phones) is 4 or more and at least 1 is in an interior location. [4.1.3(17)(c)(i)]

h 1 interior, if an interior public pay telephone is provided in a stadium or arena, in a convention center, in a hotel with a convention center, or in a covered mall. [4.1.3(17)(c)(ii)]

i 1 in each location, if a public pay telephone is located in or adjacent to a hospital emergency room, hospital recovery room, or hospital waiting room. [4.1.3(17)(c)(iii)]

j 25% but not less than 1, dispersed among all types of public telephones, including closed circuit telephones, throughout the building or facility. [4.1.3(17)(b)]

k 1 in each bank. [4.1.3(17)(d)]

(1) "Accessible" in this chart means complying with the requirements of 4.31.2 (clear floor or ground space), 4.31.3 (mounting height), 4.31.4 (protruding objects), 4.31.5 (hearing aid compatible and volume control), 4.31.6 (controls) 4.31.7 (telephone books), and 4.31.8 (cord length). Use the Public Telephone survey analysis to determine whether the unit is "accessible".

(2) A bank consists of two or more adjacent public telephones, often installed as a unit. [4.1.3(17)(a)2]

(3) Unless otherwise specified, accessible telephones may be either forward or side reach telephones. [4.1.3(17)(a)1]

(4) Additional telephones [above number required to be "accessible"] may be installed at any height. [4.1.3(17)(a)1]

(5) All telephones required to be accessible shall be equipped with a volume control. [4.1.3(17)(b)]

(6) Accessible public telephones required by 4.1.3(17)(a) do not include text telephones which are covered 4.1.3 (17) (c).

7) Vision of Deliverable

a) Samples of different styles of checklists:

vi) Builder's Book Store products

BOOKSTORE • PUBLISHER
8001 Canoga Avenue
Canoga Park, CA 91304
(818) 887-7828 • www.buildersbook.com

SIGNAGE

GENERAL SIGNAGE: Each parking space for persons with disabilities must be identified by a reflectorized sign permanently posted adjacent to and visible from each parking space, consisting of the International Symbol of Accessibility: a profile view of a wheelchair with an occupant in white on dark blue background. The symbol must consist of a white figure on a blue background. The blue must be Color No. 15090 in Federal Standard 595B.

PARKING SPACE IDENTIFICATION SIGN

Sign Size: 70 sq. in. min. area

Sign Finish: Reflectorized

Height of Sign (when in path of travel): 80" min. from the bottom of the sign to the finished floor or ground surface.

Height of Sign (when not in path of travel): 60" min. from the bottom of the sign to the finished floor or ground surface.

Location: Signs must be permanently posted either immediately adjacent to the parking space or within the projected parking space width at the head end of the parking space.

Visibility: A parking space identification sign must be visible from each parking space.
Signs identifying accessible parking spaces must not be obscured by a vehicle parked in the space.

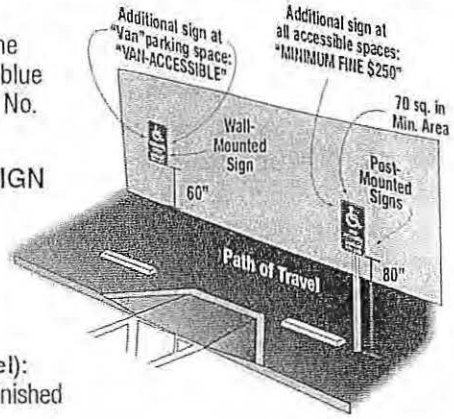

MINIMUM FINE SIGN

Additional language or an additional sign below the International Symbol of Accessibility must state: "Minimum Fine $250"

WALL-MOUNTED SIGNS

Instead of post-mounting, general signage may be centered on the wall at the interior end of the parking space.

CA T24 11B-502.6; ADA 502.6

UNAUTHORIZED PARKING

Location: An additional sign must be posted either in a conspicuous place at each entrance to an off-street parking facility, OR immediately adjacent to on-site accessible parking and visible from each parking space.

Sign Size: Min. 17" wide x 22" high

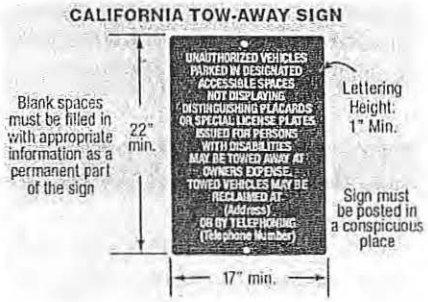

Sign Content:
"Unauthorized vehicles parked in designated accessible spaces not displaying distinguishing placards or special license plates issued for persons with disabilities will be towed away at owner's expense. Towed vehicles may be reclaimed at < PROVIDE ADDRESS > or by telephoning < PROVIDE PHONE NO. >."

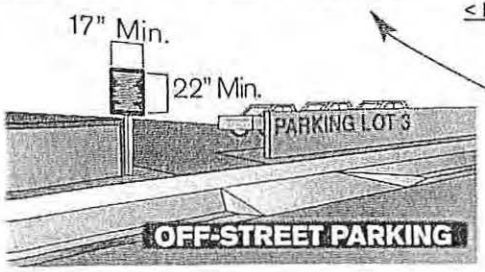

Insert appropriate information in the blank spaces as a permanent part of the sign.

DIRECTIONAL SIGNS

PAVEMENT SURFACE IDENTIFICATION

Paving/Surface Identification: Each accessible car and van parking space must have a surface identification complying with either Option 1 or Option 2.

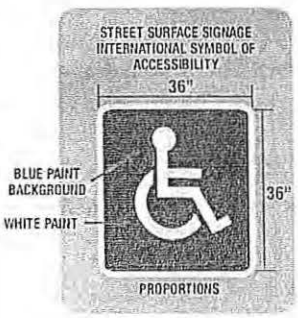

Option 1
The parking space must be marked with an International Symbol of Accessibility in white on a blue background a min. 36" wide x 36" high.

The centerline of the International Symbol of Accessibility must be a max. of 6" from the centerline of the parking space, its sides parallel to the length of the parking space and its lower corner at, or lower side aligned with, the end of the parking space length.

Option 2
The parking space must be outlined or painted blue and must be marked with an International Symbol of Accessibility a min. 36" wide x 36" high in white or a suitable contrasting color.

The centerline of the International Symbol of Accessibility must be a max. of 6" from the centerline of the parking space, its sides parallel to the length of the parking space and its lower corner at, or lower side aligned with, the end of the parking space.

CA T24 11B-502.6.4, 502.8; ADA 502.6.4, 502.8

PARKING SPACES: NUMBER & ARRANGEMENT

SINGLE PARKING STALL

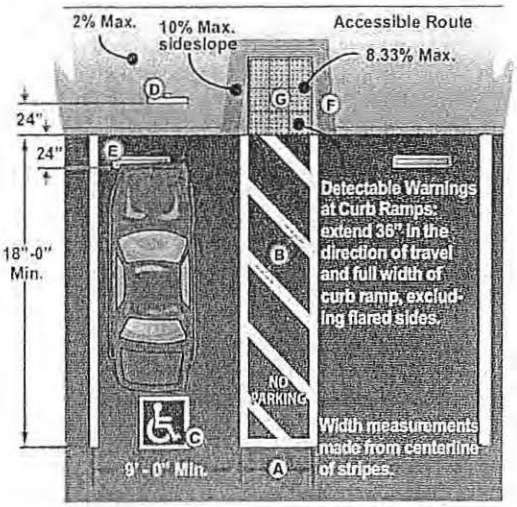

NOTE: Curb ramp required when walk is at different level than parking elevation.

DOUBLE PARKING

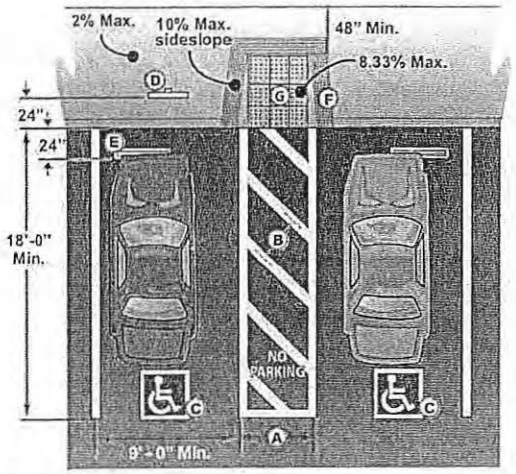

NOTE: Curb ramp required when walk is at different level than parking elevation.

DOUBLE-DIAGONAL PARKING

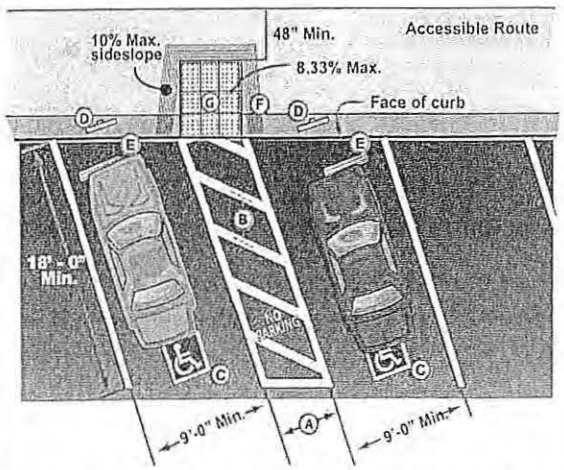

NOTE: Curb ramp required when walk is at different level than parking elevation.

CA T24 11B-502.1, 502.3; ADA 502.1, 502.3

- Each parking facility provided for the public as clients, guests, employees or residents must provide accessible parking.
- The required number of accessible parking spaces must comply with this table.
- Accessible parking spaces must be located on the shortest accessible route from parking to an accessible entrance.
- Parking spaces and access aisles must be designed so that cars and vans when parked, cannot obstruct the required clear width of adjacent accessible routes.
- The disabled must not be forced to travel behind parking spaces other than their own.
- Curb ramps are not permitted to project into access aisles and parking spaces.
- The maximum surface slope within accessible parking spaces must not exceed 2% (1:48) in any direction.
- A curb or wheel stop must be provided if required to prevent encroachment of vehicles over the required clear width of adjacent accessible routes.
- Parking spaces, access aisles and vehicular routes serving them must provide a vertical clearance of 98" min.

ACCESSIBLE SPACES REQUIRED

Total Number of Parking Spaces Provided in Parking Facility	Minimum Number of Required Accessible Spaces
1 to 25	1
26 to 50	2
51 to 75	3
76 to 100	4
101 to 150	5
151 to 200	6
201 to 300	7
301 to 400	8
401 to 500	9
501 to 1,000	2% of total
1,001 and over	20 plus 1 for each 100 or fraction thereof over 1,001

Parking spaces complying with this section must be provided in accordance with this table except as required by Hospital Outpatient Facilities, Rehabilitation Facilities and Outpatient Physical Therapy Facilities.

Hospital Outpatient Facilities: 10% of patient and visitor parking must be accessible.

Rehabilitation Facilities and Outpatient Physical Therapy Facilities: 20% of patient and visitor parking must be accessible.

CA T24 11B-208.2, 502.4 - 502.7; ADA 208.2, 502.4 - 502.7

SINGLE PARKING SPACES

- Length of parking space: 18" Min.
- Parking space min. dimensions: 9' wide x 18' long.
- Access aisle min. dimensions: 5' wide x 18' long.
- Surface slope within accessible parking spaces: 2% (1:48) max. in any direction.
- The parking access aisles must adjoin accessible route.
- The loading and unloading Access Aisle must comply with the requirements under that heading.

CA T24 11B-502.2 - 502.3; ADA 502.2 - 502.3

DOUBLE & DIAGONAL PARKING SPACES

- Length of parking space: 18" Min.
- Parking space min. dimensions: 9' wide x 18' long.
- Access aisle min. dimensions: 5' wide x 18' long.
- Two spaces can be provided within a 23' wide area, lined to provide a 9' parking area on each side of a 5' loading access aisle. See Double and Double-Diagonal illustrations.
- Two parking spaces are permitted to share a common access aisle; the access aisle must be in the middle of the two accessible parking spaces.
- Surface slope within accessible parking spaces: 2% (1:48) max. in any direction.
- The parking access aisles must adjoin an accessible route.
- The loading and unloading Access Aisle must comply with the requirements under that heading.

NOTES FOR SINGLE, DOUBLE & DIAGONAL PARKING SPACES

A. Access Aisle 5' wide x 18' long

B. Access Aisle Border: Border painted around perimeter of access aisle in blue.
Stripes Color: Preferably blue or white.
Access Aisle Hatched Lines: 36" Max. on center blue or white.
Words: "NO PARKING" must be painted in white letters a min. of 12" in height.

C. Surface Signage 36" x 36"

D. Parking Reflectorized Sign. 70 in^2 min.

E. Wheel stop

F. Curb Ramp

G. Detectable Warnings

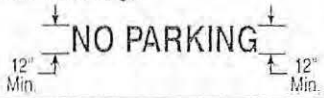

NOTE: Signage, Parking Spaces: Number & Arrangement, and Access Aisle requirements are applicable to Single, Double and Diagonal Parking Spaces.

© 2014 Buildwin Bank, Inc. All rights reserved.

VAN ACCESSIBLE PARKING SPACES

- Length of parking space: 18" Min.
- Parking space min. dimensions: 12' wide x 18' long; or 9' wide where access aisle is a min. of 8' wide.
- Access aisle min. dimensions: 5' wide x 18' long.
- Surface slope within accessible parking spaces: 2% (1:48) max. in any direction.

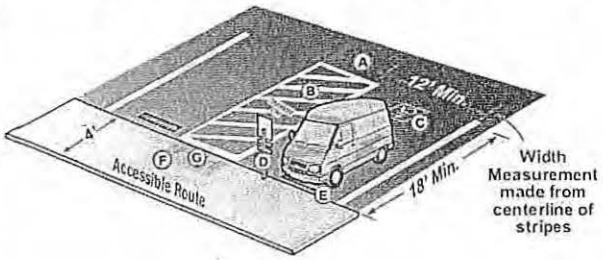

- The parking access aisles must adjoin an accessible route.
- The loading and unloading access aisle must comply with the requirements under that heading.
- Number of Van Accessible Spaces: For every 6 or fraction of 6 accessible parking spaces at least 1 must be a van accessible parking space.

CA T24 11B-208.2.4, 502; ADA 208.4, 502

NOTES FOR VAN PARKING SPACES

A. Access Aisle: 5' wide x 18' long

B: Access Aisle Border: Border painted around perimeter of access aisle in blue.
Stripes Color: Preferably blue or white.
Access Aisle Hatched Lines: 36" max. on center in blue or white.
Words: "NO PARKING" must be painted in white letters a min. of 12" in height.

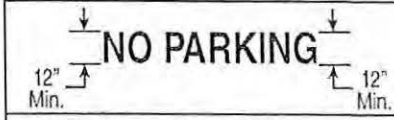

C: Surface Signage: 36" x 36"
D: Parking Reflectorized Sign: 70 in² min.
E. Wheel stop
F: Curb Ramp
G: Detectable Warnings

LOADING/UNLOADING ACCESS AISLE

- Access aisle min. dimensions: 5' wide x full length of parking space.
- Access aisles must be marked with a blue painted borderline around their perimeter; markings may extend beyond the minimum required length.
- The area within the blue borderlines must be marked with hatched lines a max. of 36" on center in a color contrasting with that of the aisle surface, preferably blue or white.
- The words "NO PARKING" must be painted on the surface within each access aisle in white letters a min. of 12" in height and located to be visible from the adjacent vehicular way.
- Access aisles must be permitted to be placed on either side of the parking space except for van parking spaces which must have access aisles located on the passenger side of the parking spaces.
- Two parking spaces are permitted to share a common access aisle.
- Access aisles must not overlap the vehicular way.
- Access aisles must adjoin an accessible route.

CA T24 11B-502.3; ADA 502.3

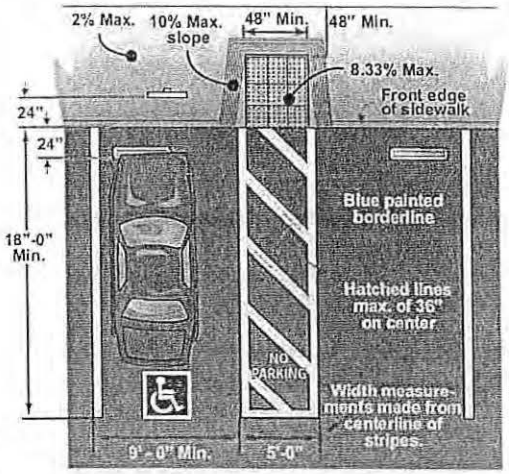

PASSENGER DROP-OFF & LOADING ZONES

- Passenger drop-off and loading zones must provide a vehicular pull-up space.
- Vehicular pull-up space dimensions: 8' wide min. and 20' long min.
- Passenger drop-off and loading zones must provide access aisles; for access aisle requirements see requirements under Access Aisle heading.
- Access aisles must be adjacent and parallel to the vehicle pull-up space.
- Each accessible passenger drop-off and loading zone designated for persons with disabilities must be identified with a reflectorized sign complying with the requirements of this section.
- Sign must be permanently posted immediately adjacent to and visible from passenger loading zone.
- Sign must state: "Passenger Loading Zone Only" and include the International Symbol of Accessibility, in white on a dark blue background.
- The blue must be Color No. 15090 in Federal Standard 595B
- Parking spaces, access aisles and vehicular routes serving them must provide a vertical clearance of 98" min.

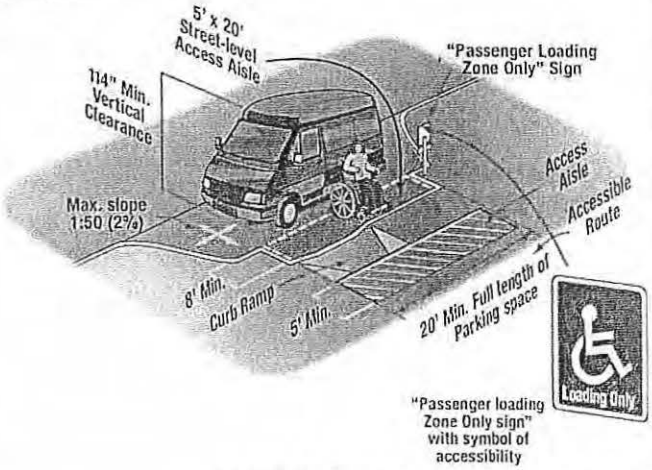

CA T24 11B-209.4, 503.2; ADA 209.4, 503.2

ACCESSIBLE ROUTE OF TRAVEL

- An accessible route is a continuous unobstructed path connecting accessible elements and spaces of an accessible site, building or facility that can be negotiated by a person with a disability using a wheelchair and that is also safe for and usable by persons with other disabilities.
- Interior accessible routes may include corridors, hallways, floors, ramps, elevators and lifts.
- Exterior accessible routes may include parking access aisles, curb ramps, crosswalks at vehicular ways, walks, ramps and lifts.

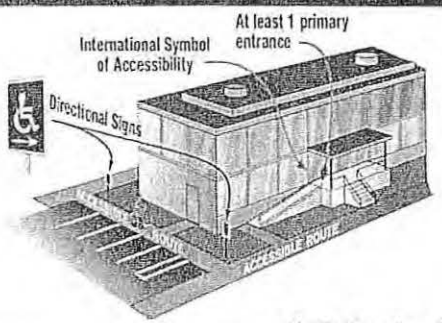

NOTE: Directional signs containing the International Symbol of Accessibility must be located at every primary public entrance and every major exterior junction with the exterior route of travel.

CA T24 Section 202, Definitions

© 2014 Buildable Books, Inc. All rights reserved

WALKS AND WALKWAYS

CLEAR WIDTH – SIDEWALKS & WALKS

- Clear width for sidewalks and walks: 48" min.
- The clear width may be reduced to 36" when right-of-way restrictions, natural barriers or other existing conditions don't allow compliance with the 48" clear sidewalk width because it would create an unreasonable hardship.

SLOPE

- The running slope of sidewalks must not exceed the general grade established for the adjacent street or highway.

CONTINUOUS GRADIENT

- All walks with continuous gradients must have resting areas, 5' in length, at intervals of 400' max.
- The resting area must be at least as wide as the walk.
- The slope of the resting area in all directions must be 1:48 max.

OPENINGS

- Openings in floor or ground surfaces must not allow passage of a sphere more than ½" diameter.
- Elongated openings must be placed so that the long dimension is perpendicular to the dominant direction of travel.

WARNING CURBS

- Abrupt changes in level exceeding 4" in a vertical dimension between walks, sidewalks or other pedestrian ways and adjacent surfaces or features must be identified by warning curbs at least 6" in height above the walk or sidewalk surface.
- A warning curb is not required between a walk or sidewalk and an adjacent street or driveway.
- A warning curb is not required when a guard or handrail is provided with a guide rail centered 2" min. and 4" max. above the surface of the walk or sidewalk.

CHANGES IN LEVEL

- Changes in level of ¼" high max. are permitted to be vertical and without edge treatment.
- Changes in level between ¼" high min. and ½" high max. must be beveled with a slope not steeper than 1:2.
- Changes in level greater than ½" high must be ramped.

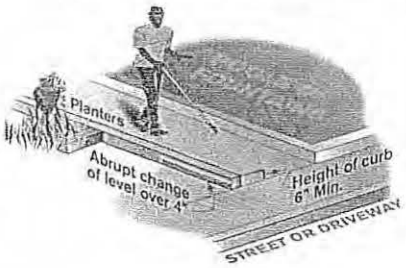

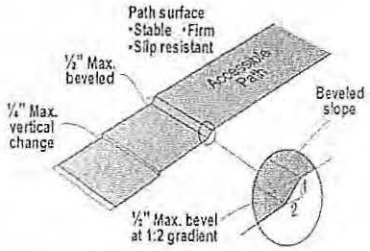

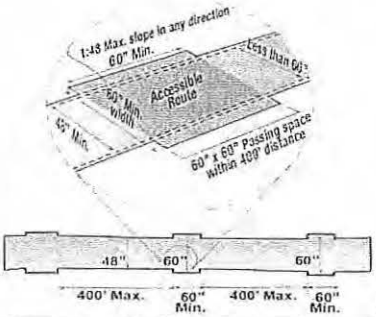

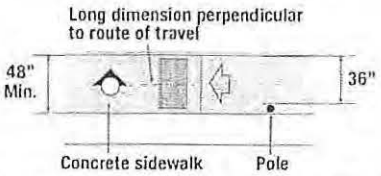

CA T24 11B-302.3-303, 403; ADA 302.3-303, 403

CURB RAMPS

CURB RAMPS - TYPE

- Curb ramps may be perpendicular, parallel or a combination of perpendicular and parallel.

LOCATION

- Curb ramps and the flared sides of curb ramps must be located so that they do not project into vehicular traffic lanes, parking spaces or parking access aisles.
- Curb ramps at marked crossings must be wholly contained within the markings, excluding any flared sides.

CURB WIDTH

- The clear width of curb ramp runs (excluding any flared sides), blended transitions, and turning spaces must be 48" min.

LANDINGS

- Landings must be provided at the tops of curb ramps and blended transitions.
- The landing clear length must be 48" min.
- The landing clear width must be at least as wide as the curb ramp, excluding any flared sides or the blended transition leading to the landing.
- The slope of the landing in all directions must be 1:48 max.

GROOVED BORDER

- Curb ramps must have a grooved border 12" wide along the top of the curb ramp at the level surface of the top landing and at the outside edges of the flared sides.
- The grooved border must consist of a series of grooves ¼" wide x ¼" inch deep, at ¾" on center.
- At parallel curb ramps, the grooved border must be on the upper approach immediately adjacent to the curb ramp across the full width of the curb ramp.
- A grooved border is not required at blended transitions.

DETECTABLE WARNINGS

- Detectable warnings at curb ramps must extend 36" in the direction of travel and the full width of the ramp run excluding any flared sides.
- Detectable warnings must be located so the edge nearest the curb is 6" min. and 8" max. from the line at the face of the curb marking the transition between the curb and the gutter, street or highway.
- On parallel curb ramps, detectable warnings must be placed on the turning space at the flush transition between the street and sidewalk.

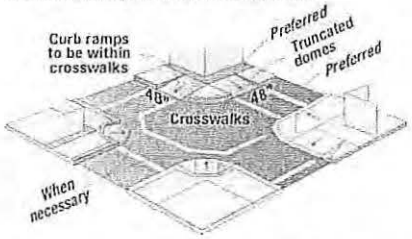

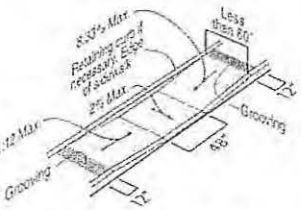

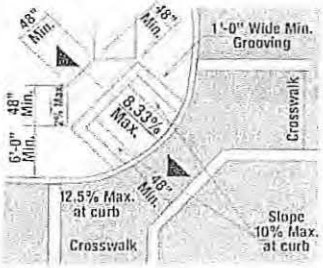

CA T24 11B-406.1, 406.5, 705.1.2.2; ADA 406.1; 406.5

DETECTABLE WARNING SURFACES

TRUNCATED DOMES

- Detectable warnings must consist of a surface of truncated domes.
- Truncated domes in a detectable warning surface must have a base diameter of 0.9" min. and 0.92" max., a top diameter of 0.45" min. and 0.47" max. and a height of 0.18" min. and 0.22" max.
- Truncated domes in a detectable warning surface must have a center-to-center spacing of 2.3" min. and 2.4" max., and a base-to-base spacing of 0.65" min., measured between the most adjacent domes on a square grid.
- Where installed in a radial pattern, truncated domes must have a center-to-center spacing of 1.6" min. to 2.4" max.

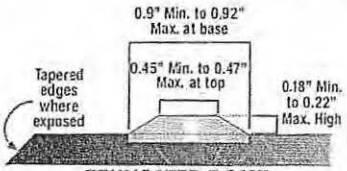

TRUNCATED DOME

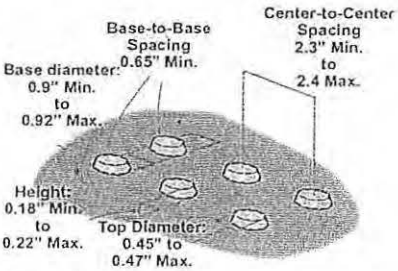

CONTRAST

- Detectable warning surfaces must contrast visually with adjacent walking surfaces either light-on-dark, or dark-on-light.
- The material used to provide contrast must be an integral part of the surface.
- Contrast must be determined by:

  Contrast = [(B1-B2)/B1] x 100 percent where

  B1 = light reflectance value (LRV) of the lighter area and

  B2 = light reflectance value (LRV) of the darker area.

  - Where the detectable warning surface does not adequately contrast with adjacent surfaces, a 1" wide black strip must separate yellow detectable warning from adjacent surfaces.

RESILIENCY

- Detectable warning surfaces must differ from adjoining surfaces in resiliency or sound-on-cane contact.

COLOR

- Detectable warning surfaces must be yellow conforming to FS 33538 of Federal Standard 595C.
- Detectable warning surfaces at curb ramps, islands or cut-through medians must not be required to comply with the color requirement.

CA T24 11B-705; ADA 705

BUILDER'S BOOK, INC. / BOOKSTORE & PUBLISHER For additional copies, a full line of Codes, Reference Books, Videos and other resources related to this topic, call (800) 273-7375 or (818) 887-7828, Fax (818) 887-7990 or visit 8001 Canoga Avenue, Canoga Park CA 91304, or www.buildersbook.com.
COPYRIGHT/DISCLAIMER: Copyright 2014 Builder's Book, Inc. All rights reserved. Information is provided here in summarized form to provide a quick guide to this subject matter. The information summarized herein is subject to change by legislative and regulatory action, without notice. This quick guide is by no means intended to be comprehensive nor authoritative. Consult original code sources and/or competent professionals for guidance on your specific situation. The publisher is not providing legal, accounting, or other professional services and is not liable for any damage, however caused, resulting from the use or reliance upon this information.
ISBN - 10: 1889892300
ISBN - 13: 978 - 1 - 889892 - 30 - 6
9781889892306
U.S. $7.95

7) Vision of Deliverable

a) Samples of different styles of checklists:

vii) DSA checklist

PARKING

Survey Form 1

Space/Room Item Name:	Item No.:	Floor No.:	Project No.:

Item No.	Specific Item	Technical Requirements ADA Standards /// CBC Sections	As-built Dimensions or Survey Comments	Lessor/Architect Comments	Check
1.1	Off-site Parking Spaces	If no on-site parking is provided, is there accessible parking provided off-site nearby? (Note: Accessible parking for employees or visitors or both may be provided either in the public rights-of-way or in an off-site facility.) 11B-208.1, 11B-208.3.1			Yes No N/A ☐ ☐ ☐
1.2	Number - Accessible Parking Spaces	Where parking spaces are provided for self-parking by employees or visitors or both, is the required number of accessible parking spaces provided? (See Minimum Requirements Summary Sheet A) (Note: All or some of the accessible parking spaces may be in a different location if equivalent or greater accessibility is ensured.) 11B-208.2, Table 11B-208.2			Yes No N/A ☐ ☐ ☐
1.3	Each Area/Lot	Are the accessible parking spaces located in each specific area/lot? OR If the accessible parking spaces are in a different location, is equivalent or greater accessibility provided in terms of distance from the accessible entrance, user cost and convenience? 11B-208.2			Yes No N/A ☐ ☐ ☐
1.4	Van Accessible Spaces	Is one in every six accessible parking spaces (but not less than one) designated "van accessible"? 11B-208.2.4, 11B-208.2			Yes No N/A ☐ ☐ ☐
1.5	Location - Serving Accessible Entrance	Are accessible parking spaces which serve a particular building on the shortest accessible route of travel from adjacent parking to the building's accessible entrance? 11B-208.1, 11B-208.3			Yes No N/A ☐ ☐ ☐
1.6	Lot Layout	Are parking stalls arranged so that persons with disabilities are not compelled to wheel or walk behind parked cars other than their own? 11B-502.7.1			Yes No N/A ☐ ☐ ☐
1.7	Serving Multiple Accessible Entrances	If the building has multiple accessible entrances with adjacent parking, are the accessible parking spaces dispersed and on the shortest accessible route of travel to the parking facility's accessible pedestrian entrance? 11B-208.1, 11B-208.3.1			Yes No N/A ☐ ☐ ☐
1.8	Separate Parking Facility	Where a parking facility does not serve a particular building, are the accessible parking spaces on the shortest accessible route of travel to the parking facility's accessible pedestrian entrance? 11B-208.1, 11B-208.3.1			Yes No N/A ☐ ☐ ☐
1.9	Parking Space Width - Car	Are accessible car parking spaces, at least 9' wide and 18' long with a demarcated access aisle? (two spaces may share a common aisle)			Yes No N/A ☐ ☐ ☐
1.10	Parking Space Width - Van	Are accessible van parking spaces at least 12' wide and 18' long with a demarcated access aisle?			Yes No N/A ☐ ☐ ☐

Date	Surveyor Initials	Page ..... of .....

PARKING

Survey Form 1

Space/Room Item Name:	Item No.:	Floor No.:	Project No.:

Item No.	Specific Item	Technical Requirements ADA Standards /// CBC Sections	As-built Dimensions or Survey Comments	Lessor/Architect Comments	Check
1.11	Van Access Aisle	If the parking space is designated as "van accessible," is the adjacent access aisle at least 5' wide by 18' long and located on the passenger side of the vehicle space? See 1.12 below for van space and access aisle size exception. 11B-502.2 exception			Yes No N/A ☐ ☐ ☐
1.12	Car & Van Access Parking	If there is a 5' access aisle shared by a car and van, is the car parking space 9' wide and the van parking space 12' wide with 18' long minimum spaces or if the van parking space is 9' wide, is the access aisle 8' wide with 18' long minimum spaces? 11B-502.2			Yes No N/A ☐ ☐ ☐
1.13	Car Access Aisles	Are all other access aisles at least 5' wide and 18' long, extending the full required length of the parking space they serve? 11B-502.3.1, 11B-502.3.2			Yes No N/A ☐ ☐ ☐
1.14	Level Surface	Are the accessible parking spaces and access aisles level with no slope greater than 1:48 in all directions? (This means a curb ramp cannot project into the access aisle.) 11B-502.4			Yes No N/A ☐ ☐ ☐
1.15	Surface	Are access aisles stable, firm, and slip resistant and clear of the vehicular way? 11B-302, 11B-502.3.4			Yes No N/A ☐ ☐ ☐
1.16	Access Aisle and Accessible Route	Does each access aisle connect directly to an accessible route of travel, and on the shortest accessible route? (Use Form 3 - Exterior Routes of Travel) 11B-208.3.1			Yes No N/A ☐ ☐ ☐
1.17	Parking Signs	Does each accessible parking space have a reflectorized sign visible from each stall showing the ISA? 11B-502.6			Yes No N/A ☐ ☐ ☐
1.18	Car & Van Accessible Parking Signs	Do van accessible spaces have a sign stating "Van Accessible" below the ISA and do both car and van have additional language or an additional sign below the ISA stating "Minimum fine $250" and is it minimum 60" minimum AFF or ground? 11B-502.6, 11B-502.6.2			Yes No N/A ☐ ☐ ☐
1.19	Pavement Sign	Is there a minimum 36" square ISA painted on the pavement at the rear of the stall, centered a maximum of 6" from the centerline of the parking space and aligned with the end of the parking space length? 11B-502.6.4.1, 11B-502.6.4.2			Yes No N/A ☐ ☐ ☐
1.20	Marking	Is the access aisle marked with a blue painted borderline around the perimeter and marked with hatched lines a maximum of 36' OC in a color contrasting with the aisle surface and are the words "NO PARKING" provided in each access aisle, painted in white, 12" high letters? 11B-502.3.3			Yes No N/A ☐ ☐ ☐

Date	Surveyor Initials	Page ..... of .....

Space/Room Item Name:	Item No.:	Floor No.:	Project No.:

Item No.	Specific Item	Technical Requirements ADA Standards /// CBC Sections	As-built Dimensions or Survey Comments	Lessor/Architect Comments	Check
1.21	Tow-away Sign	Is there a tow-away sign posted in a conspicuous place at each entrance to off–street parking lot, or immediately adjacent to and visible from each accessible stall? 11B-502.8			Yes No N/A ☐ ☐ ☐
1.22	Van Accessible Spaces - Vertical Clearance	Do accessible spaces and their access aisles have a vertical clearance of at least 98"? 11B-502.5			Yes No N/A ☐ ☐ ☐
1.23	Van Accessible Spaces - Vertical Clearance	Does one vehicular access route to and from van accessible spaces have a vertical clearance of at least 98"? (Van accessible spaces may be grouped on one level of a parking structure.) 11B-502.5			Yes No N/A ☐ ☐ ☐
1.24	Other	If you have identified any other related barriers that were not covered by this survey form, check the "No" field and provide that information below.			Yes No N/A ☐ ☐ ☐

Use this Survey Form in conjunction with the Minimum Requirements Summary Sheets and with the 2010 Americans with Disabilities Act Standards for Accessible Design (ADA Standards), and Part 2 of Title 24 of the California Code of Regulations (CBC).

Add a quick layout sketch of the surveyed area and any additional comments below:

RESD © 2013 v.2 Access Compliance Facility Survey Checklist for State Leased Facilities

7) Vision of Deliverable

a) Samples of different styles of checklists:

viii)CALBO Samples from Layman

Swimming Pools, Wading Pools, and Spas

In determining which pool entry type is required the following steps should be applied when designing or reviewing to the 2013 CBC:

Determine the type and size of pool which is proposed to be installed.

Refer to the 2013 CBC 11B-242.2 for required type of entry by using the general requirements as shown below in the means of pool entry table.

Accessible routes, accessible parking, pool decks, restrooms and all accessible elements shall comply with applicable requirements.

11B-242.2 Swimming Pools. At least two accessible means of entry shall be provided for swimming pools…At least one accessible means of entry provided shall comply with 11B-1009.2 (Pool Lifts) or 11B-1009.3 (Sloped Entries).

Where a swimming pool has less than 300 linear feet of swimming pool wall, no more than one accessible means of entry shall be required provided that the accessible means of entry is a swimming pool lift complying with 11B-1009.2 (Pool Lifts) or sloped entry complying with 11B-1009.3 (Sloped Entries).

Wave action pools, leisure rivers, sand bottom pools, and other pools where user access is limited to one area shall not be required to provide more than one accessible means of entry and catch pools shall not be required to provide an accessible means of entry provided that the catch pool edge is on an accessible route.

MEANS OF POOL ENTRY

POOL TYPE	POOL ENTRY TYPE				
	POOL LIFT	SLOPED ENTRY	TRANSFER WALL	TRANSFER SYSTEM	STAIRS
	Swimming Pool Primary Entry		Swimming Pool Secondary Entry		
Swimming Pool 300 Linear Feet or more of pool wall requires 2 means of entry and 1 shall be a primary entry	✓	✓	✓	✓	✓
Swimming Pool Less than 300 Linear Feet of pool wall requires 1 primary entry	✓	✓			
Wave action, lazy river, and other pools Entry is limited to one area	✓	✓		✓	
Wading Pools One means of entry required		✓			
Spas Minimum of one means of entry required with a minimum of 5% in a cluster of spas	✓		✓	✓	

Inspection Checklist for Pool Lifts

- ❑ 11B-242.2 Is there more than 300' linear feet of swimming pool wall? _____
- ❑ If yes, are two accessible means of entry provided? _____
- ❑ If no, is one accessible means of entry provided? _____
- ❑ Is one accessible means of entry provided for spas? _____
- ❑ If spas clustered, Is no fewer than one or 5% accessible? _____
- ❑ 11B-1009.2 Is a pool lift provided for entry? _____
- ❑ 11B-1009.2.1 Is lift located where water level is 36" min and 48" max except for spas? _____
- ❑ 11B-1009.2.2 Is the centerline of the seat located 16" min. from the edge of the pool? _____
- ❑ Is the deck surface between the centerline of the seat and the edge of the pool level (1:48)? _____

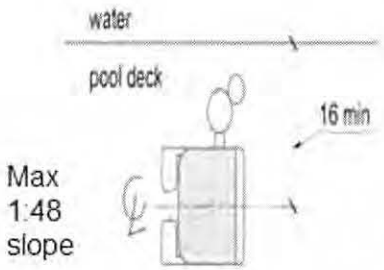

Figure 11B-1009.2.2
Pool Lift Seat Location

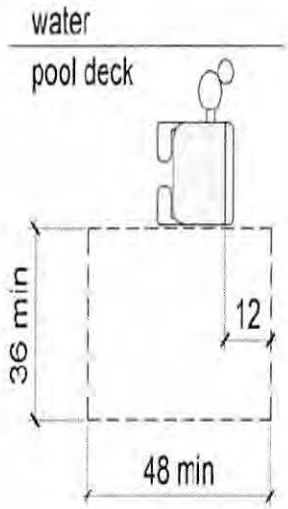

Figure 11B-1009.2.3
Clear Deck Space at Pool Lifts

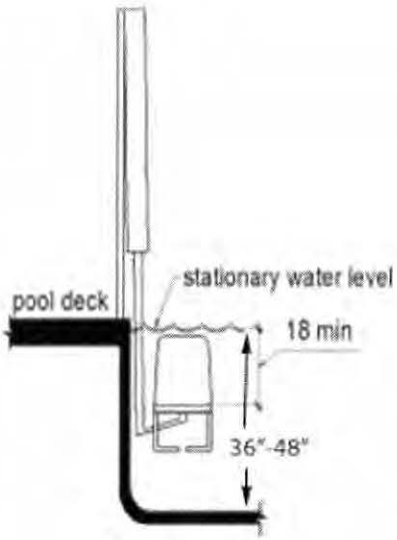

Figure 11B-1009.2.8
Pool Lift Submerged Depth

- ❑ 11B-1009.2.3 Is there a 36"X48" clear, level deck space next to the seat opposite the water for transfer? _____
- ❑ Does the clear deck space extend 48" from a line 12" behind the rear edge of the seat? _____
- ❑ Is the clear deck space level (1:48)? _____
- ❑ 11B-1009.2.4 Is the seat rigid and does it have a back support at least 12" tall? _____
- ❑ Does the seat stop at 17"min-19"max above deck to top of seat? _____
- ❑ Does the seat have an occupant restraint that is compliant with 11B-309 Operable Parts? _____
- ❑ 11B-1009.2.5 Is the seat 16" wide minimum? _____
- ❑ 11B-1009.2.6 Is the seat provided with footrest and two armrests? *Footrest not required in spas?* _____
- ❑ Does the armrest opposite the water fold clear of the seat or is it removable? _____
- ❑ 11B-1009.2.7 Is the lift capable of unassisted operation from both the deck and water level? _____
- ❑ Are the controls and operating mechanisms operable with one hand, not require tight grasping, pinching, or twisting of the wrist with the force required to activate *operable parts 5 pounds maximum?* _____
- ❑ Is the lift stable with no unintended movement while a person is getting into or out of the seat? _____
- ❑ 11B-1009.2.8 Will the lift submerge to a water depth of 18" minimum below stationary water level? _____
- ❑ 11B-1009.2.9 Does the lift have a weight capacity of 300 lb. minimum? _____

Inspection Checklist for Sloped Entry

- ❑ 11B-1009.3 Is there a sloped entry? _____
- ❑ If spas clustered, is 5% and no fewer than one entry provided? _____
- ❑ 11B-1009.3.1 Is the sloped entry 8.33% maximum slope? _____
- ❑ 11B-1009.3.2 Does the sloped entry extend to a depth of 24"-30" below the stationary water level? _____
- ❑ Does the sloped entry extend to a depth of 24"-30" below the stationary water level (1:48) maximum slope and 72" minimum long at the bottom of the ramp? _____
- ❑ 11B-1009.3.3Is there at least two handrails with a 33" – 38" clear width? _____

Handrails not required in wading pools and Handrail extensions are not required at the bottom landing.

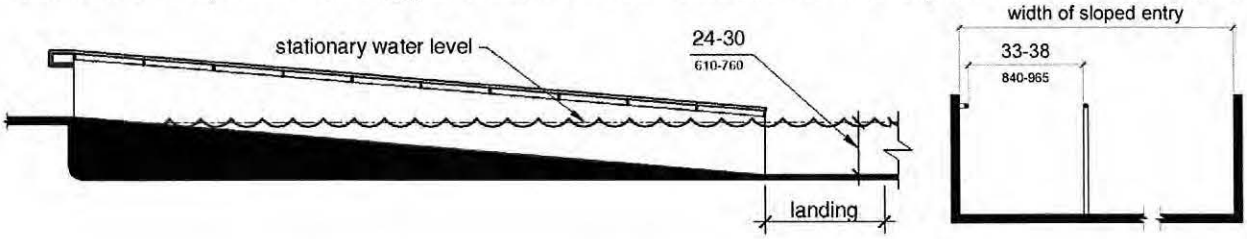

Inspection Checklist for Pool Transfer Walls

- ❑ 11B-1009.4.1 Is a transfer wall provided? _____
- ❑ Is there a 60" X 60" minimum clear deck space in front of the transfer wall? _____
- ❑ Is the maximum slope of the deck space 1:48" maximum slope? _____
- ❑ If only one grab bar is provided, is it centered in the clear deck space? _____
- ❑ If two grab bars are provided, is the clear deck space centered between the grab bars? _____
- ❑ 11B-1009.4.2 Is the height of the transfer wall 16" minimum -19" maximum above the pool deck? _____

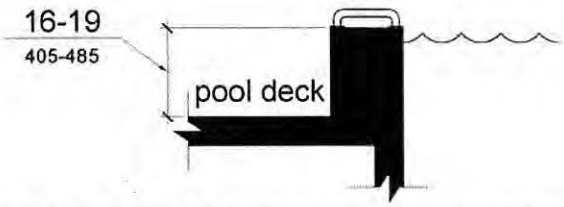

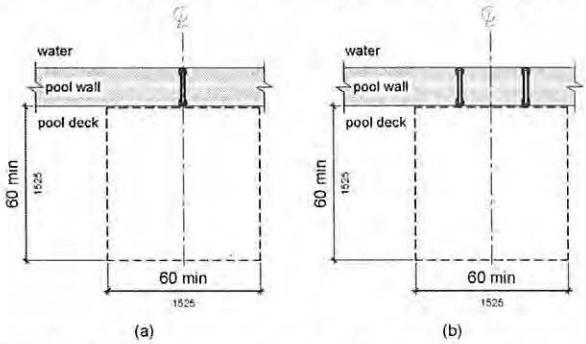

- ❑ 11B-1009.4.3 Is the depth of the transfer wall 12 inches minimum and 16 inches maximum? _____
- ❑ Is the length of the transfer wall 60 inches minimum and centered on the clear deck space? _____
- ❑ Are the surfaces of transfer walls not sharp and have rounded edges? _____

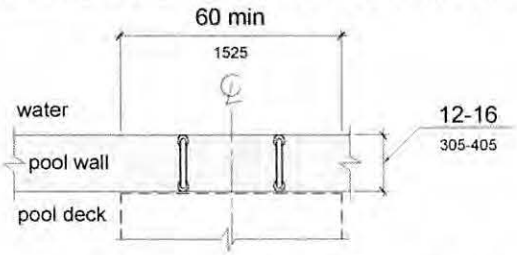

Inspection Checklist for Grab Bars on Pool Transfer Walls

- ❑ 11B-1009.4.5 Does at least one grab bar have circular cross sections with an outside diameter of 1¼ inches minimum and 2 inches maximum provided on the transfer wall? _____
- ❑ Are Grab bars perpendicular to the pool wall and extend the full depth of the transfer wall? _____
- ❑ Is the top of the gripping surface 4 inches minimum and 6 inches maximum above transfer walls? _____
- ❑ Where one grab bar is provided, is the clearance 24 inches minimum on both sides of the grab bar? _____
- ❑ Where two grab bars are provided, is the clearance between grab bars 24 inches minimum? _____
- ❑ Grab bars on transfer walls shall not be required to be 34"-38" high. _____

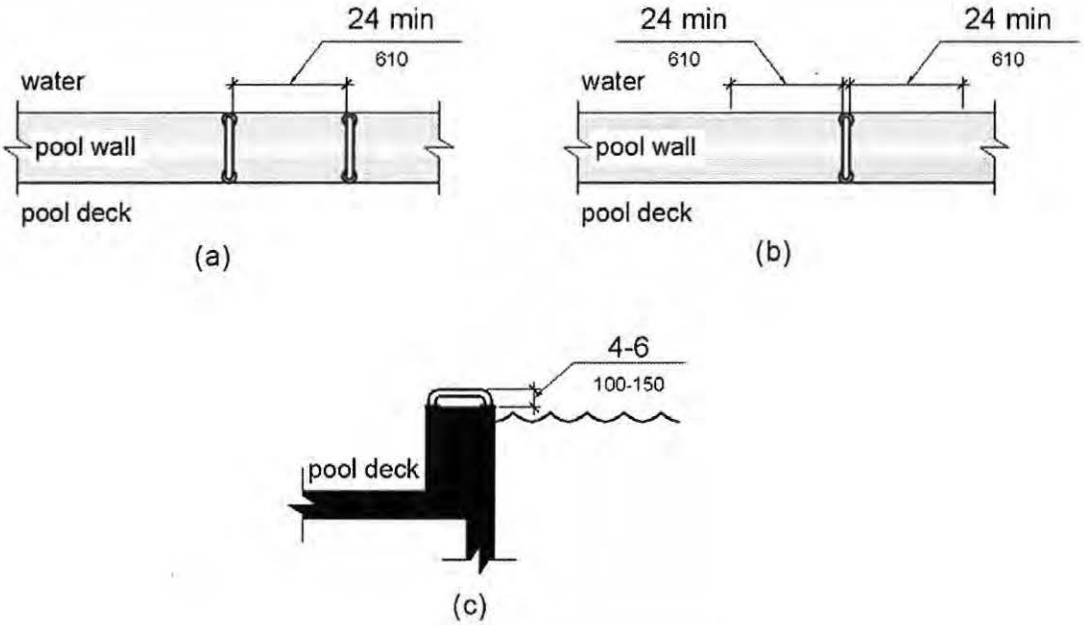

- ❑ 11B-1009.5.1 Is a transfer platform provided at the head of each transfer system? _____
- ❑ Are the transfer platforms 19 inches minimum clear depth and 24 inches minimum clear width? _____

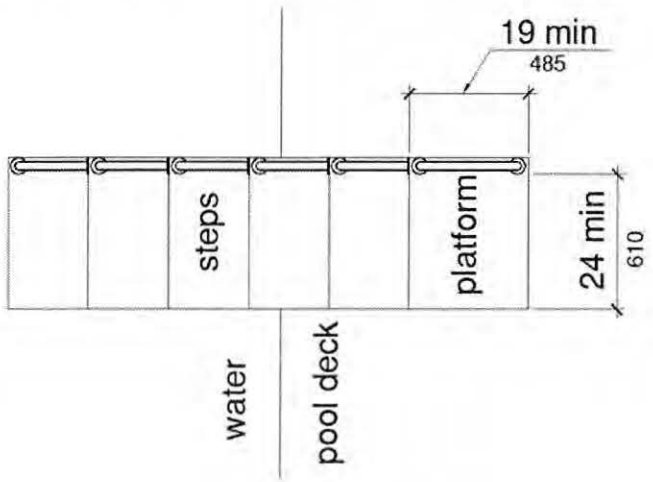

Inspection Checklist for Platforms on Pool Transfer Walls

- ❑ 1009.5.2 Is a transfer space of 60 inches minimum by 60 inches minimum with a slope not steeper than 1:48 provided at the base of the transfer platform surface and centered along a 24 inch minimum side of the transfer platform? _____
- ❑ Is the side of the transfer platform serving the transfer space unobstructed? _____

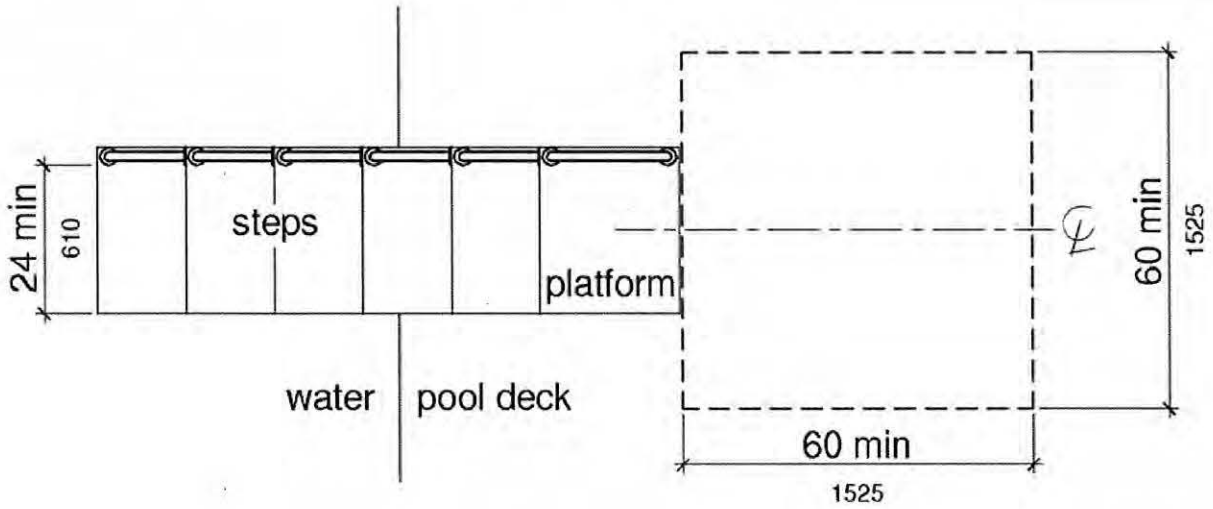

- ❑ 11B-1009.5.3 Is the height of the transfer platform 16" minimum -19" maximum above the pool deck? ____
- ❑ 11B-1009.5.4 Is the transfer step height 8 inches maximum? _____
- ❑ Does the surface of the bottom tread extend to a water depth of 18 inches minimum below the stationary water level? _____
- ❑ 11B-1009.5.5 Does the surface of the transfer system have smooth rounded edges? _____

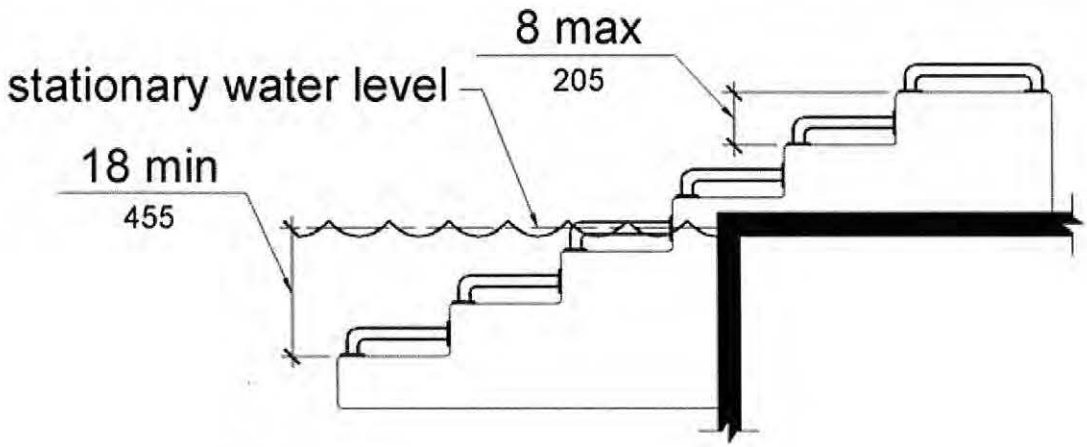

Inspection Checklist for Steps on Pool Transfer Systems

- ❑ 11B-1009.5.6 Does each transfer step have a tread clear depth of 14 inches minimum and 17 inches maximum and with a tread clear width of 24 inches minimum? _____

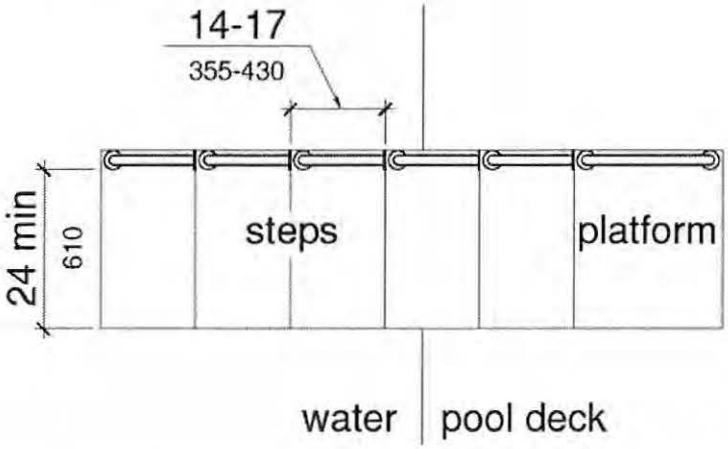

- ❑ 11B-1009.5.7 Is at least one grab bar on each transfer step and the transfer platform or a continuous grab bar serving each transfer step and the transfer platform provided? _____
- ❑ Where a grab bar is provided on each step, are the tops of gripping surfaces 4 inches minimum and 6 inches maximum above each step and transfer platform? _____
- ❑ Where a continuous grab bar is provided, is the top of the gripping surface 4 inches minimum and 6 inches maximum above the step nosing and transfer platform? _____
- ❑ Do grab bars have circular cross sections with an outside diameter of 1¼ inches minimum and 2 inches maximum and located on at least one side of the transfer system? _____
- ❑ Does the grab bar located at the transfer platform allow an obstructed transfer? _____

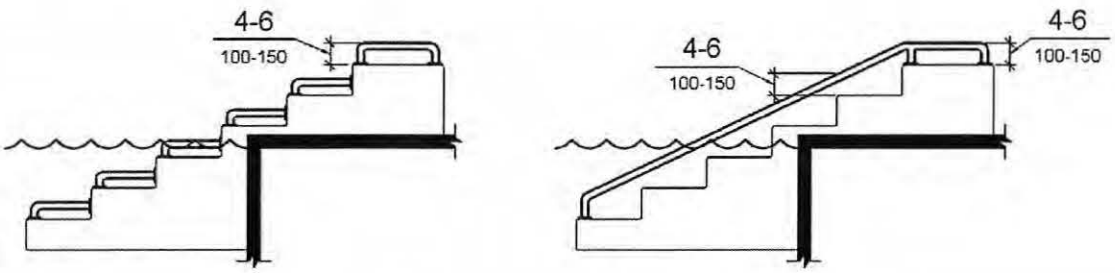

(a)
individual grab bars

(b)
continuous grab bars

- ❑ 11B-1009.6.1 Are the pool stair tread runs 11" minimum in length? _____
- ❑ EXCEPTION: Pool step riser heights shall not be required to be 4 inches high minimum and 7 inches high maximum provided that riser heights are uniform. _____
- ❑ 11B-1009.6.2 Is the width between handrails shall be 20 inches minimum and 24 inches maximum? _____
- ❑ Are the handrails 34"-38" above the nose of the treads? _____

Note handrail extensions shall not be required on pool stairs.

Inspection Checklist for Pool Fences

- ❑ CBC 3119B is the pool provided with a pool enclosure? _____
- ❑ CBC 3119B Is it enclosed by one or a combination of the following: a fence, portion of a building, wall, or other approved durable enclosure? _____
- ❑ Is the enclosure a minimum effective perpendicular height of 5' as measured from the outside as depicted in Figure 31B-4? _____
- ❑ Are the openings, holes or gaps in the enclosure, doors and/or gates designed not to allow the passage of a 4" diameter sphere? _____
- ❑ Is the enclosure designed and constructed so that it cannot be readily climbed by small children? _____
- ❑ Is the enclosure free from horizontal and diagonal member designs which might serve as a ladder for small children? _____
- ❑ Are horizontal members shall be spaced at least 48" apart? _____
- ❑ Are planters or other structures that can be climbed a minimum of 5'of the outside of the pool enclosure or outside of a 5' arc as depicted in Figure 31B-5? _____

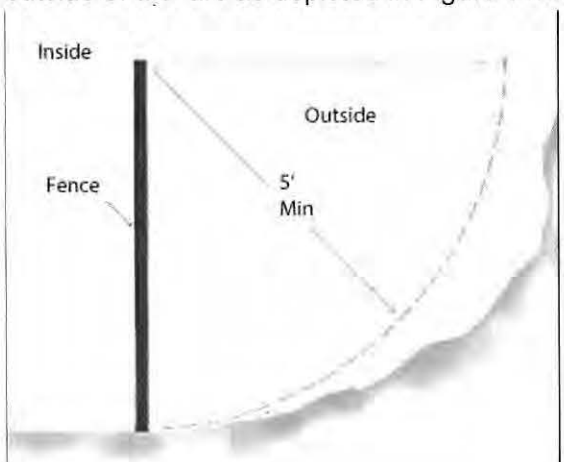

FIGURE 31B-5
EFFECTIVE FENCING HEIGHT

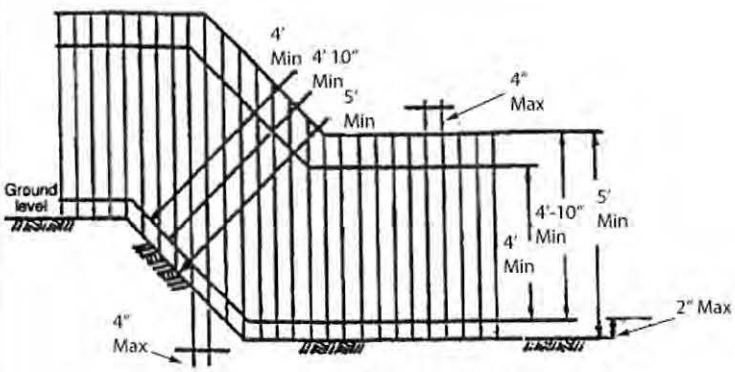

FIGURE 31B-4
PERPENDICULAR FENCING DIMENSIONS ON SLOPING GROUND

- ❑ If chai link is used, are the openings not greater than 3/4" inches measured horizontally? _____

CBC 3119B.2 If gates and doors opening into the pool enclosure also shall meet the following specifications:

- ❑ Are the gates and doors equipped with self-closing and self-latching devices operable without twisting or pinching? _____
- ❑ Does the self-latching device keep the gate or door securely closed? _____
- ❑ Gates and doors open outwardly away from the pool except where otherwise prohibited by law? _____
- ❑ Hand activated door or gate opening hardware shall be located at a height no lower than 42" but no higher than 44" above the deck or walkway? _____
- ❑ Are the gates and doors capable of being locked during times when the pool is closed? _____
- ❑ Does the pool enclosure have at least one means of egress without a key for emergency purposes? _____
- ❑ Do the gates have a sign in letters at least 4" high stating EMERGENCY EXIT"? _____
- ❑ Is the enclosure constructed so that all persons will be required to pass through common pool enclosure gates or doors in order to gain access to the pool area? _____
- ❑ Do all gates and doors exiting the pool area open into a public area or a walk-way? _____

PARKING FACILITIES CHECKLIST

Where parking spaces are provided, parking spaces shall be provided in accordance with Section 11B-208.

Exception: Parking spaces used exclusively for buses, trucks, other delivery vehicles, or vehicular impound shall not be required to comply with Section 11B-208 provided that lots accessed by the public are provided with a passenger loading zone complying with Section 11B-503.

Each parking facility provided for covered multifamily dwellings and facilities (swimming pools, club houses, recreation areas, etc.) shall provide accessible parking. Parking facilities shall include, but not be limited to: Garages; Private garages; Carports; Off-street parking (parking lots/spaces).

TABLE *11B*-208.2
PARKING SPACES

TOTAL NUMBER OF PARKING SPACES PROVIDED IN PARKING FACILITY	MINIMUM NUMBER OF REQUIRED ACCESSIBLE PARKING SPACES
1 to 25	1
26 to 50	2
51 to 75	3
76 to 100	4
101 to 150	5
151 to 200	6
201 to 300	7
301 to 400	8
401 to 500	9
501 to 1000	2 percent of total
1001 and over	20, plus 1 for each 100, or fraction thereof, over 1000

Required accessible parking spaces

- ☐ Use table above for the minimum number of parking spaces to be provided number 11B-208.2.
- ☐ Where more than one parking facility is provided on a site, the number of accessible spaces provided on the site shall be calculated according to the number of spaces required for each parking facility.
- ☐ Ten percent of patient and visitor parking spaces provided to serve hospital outpatient facilities, and free-standing buildings providing outpatient clinical services of a hospital shall be provided 11B-208.2.1
- ☐ Twenty percent of patient and visitor parking spaces provided to serve rehabilitation facilities specializing in treating conditions that affect mobility and outpatient physical therapy facilities shall be provided 11B-208.2.2
- ☐ Van parking spaces. For every six or fraction of six parking spaces required to comply, at least one shall be a van parking space 11B-208.2.4
- ☐ Accessible parking spaces that serve a particular building or facility shall be located on the shortest accessible route from parking to an entrance. 11B-208.3.1
- ☐ Where parking serves more than one accessible entrance, parking spaces shall be dispersed and located on the shortest accessible route to the accessible entrances. 11B-208.3.1
- ☐ In parking facilities that do not serve a particular building or facility, parking spaces shall be located on the shortest accessible route to an accessible pedestrian entrance of the parking facility. 11B-208.3.1
- ☐ All van parking spaces shall be permitted to be grouped on one level within a multi-story parking facility. 11B-208.3.1
- ☐ Parking spaces shall be permitted to be located in different parking facilities if substantially equivalent or greater accessibility is provided in terms of distance from an accessible entrance or entrances, parking fee, and user convenience. 11B-208.3.1

- ☐ Where parking spaces are marked with lines, width measurements of parking spaces and access aisles shall be made from the centerline of the markings except when they are not adjacent to another parking space. 11B-502.1
- ☐ Car and van parking spaces shall be 216 inches (18') long minimum. Car parking spaces shall be 108 inches (9') wide minimum and van parking spaces shall be 144 inches (12') wide minimum with an access aisle 60 inches (5') wide adjacent to the accessible parking space. 11B-502.2.
- ☐ Van parking spaces shall be permitted to be 108 inches (9') wide minimum where the access aisle is 96 inches (8') wide minimum. 11B-502.3.
- ☐ Access aisles shall not overlap the vehicular way, the access aisles shall be permitted to be placed on either side of the parking space except for van parking spaces which shall have access aisles located on the passenger side of the parking spaces. 11B-502.3.4
- ☐ Parking spaces and access aisles serving them shall be stable, firm, and slip resistant. Access aisles shall be at the same level as the parking spaces they serve and 1:48 maximum slope. 11B-502.4
- ☐ Accessible parking spaces shall be marked as shown below.

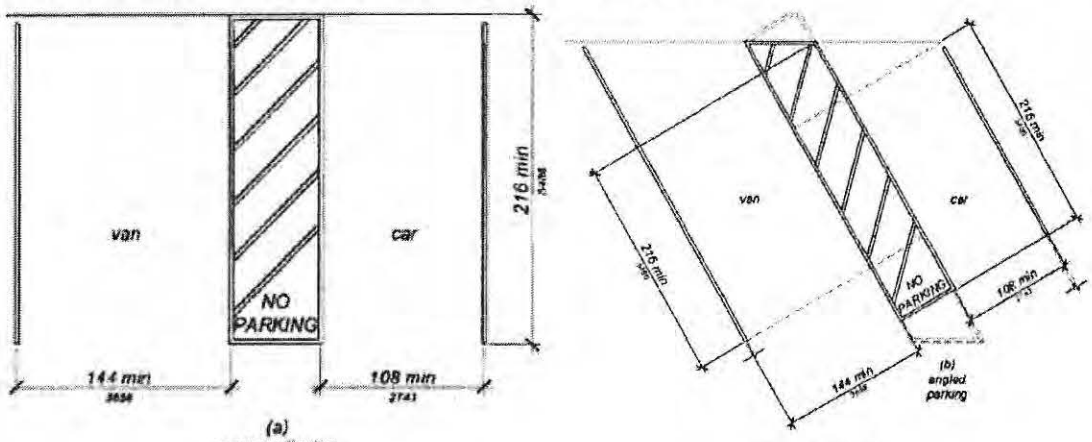

FIGURE 11B-502.2
VEHICLE PARKING SPACES

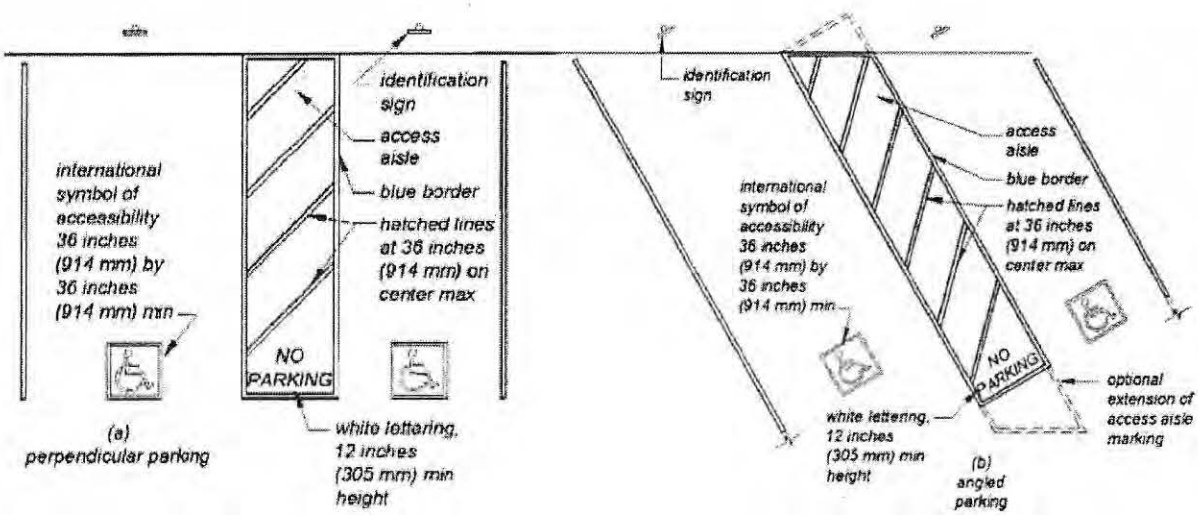

- ☐ Accessible parking spaces, access aisles and vehicular routes serving them shall provide a vertical clearance of 98 inches minimum. 11B-502.5
- ☐ Accessible parking space identification signs shall include the International Symbol of Accessibility and signs identifying van parking spaces shall contain additional language or an additional sign with the designation "van accessible." 11B-502.6

- ☐ Signs shall be 60 inches (5') minimum above the finish floor or ground surface measured to the bottom of the sign. 11B-502.6
- ☐ Signs located within an accessible route shall be a minimum of 80 inches above the finish floor or ground surface measured to the bottom of the sign. 11B-502.6
- ☐ Accessible parking identification signs shall be reflectorized with a minimum area of 70 square inches. 11B-502.6.1
- ☐ Additional language or an additional sign below the International Symbol of Accessibility shall state "Minimum Fine $250" 11B-502.6.2
- ☐ A parking space identification sign shall be visible from each parking space. Signs shall be permanently posted either immediately adjacent to the parking space or within the projected parking space width at the head end of the parking space. Signs may also be permanently posted on a wall at the interior end of the parking space. 11B-502.6.3
- ☐ Accessible parking spaces and access aisles shall be designed so that cars and vans, when parked, cannot obstruct the required clear width of adjacent accessible routes. 11B-502.7
- ☐ Parking spaces and access aisles shall be designed so that persons using them are not required to travel behind parking spaces other than to pass behind the parking space in which they parked. 11B-502.7.1
- ☐ A curb or wheel stop shall be provided if required to prevent encroachment of vehicles over the required clear width of adjacent accessible routes. 11B-502.7.2 11B-502.8
- ☐ An additional sign shall be posted either; 1) in a conspicuous place at each entrance to an off-street parking facility or 2) immediately adjacent to on-site accessible parking and visible from each parking space. 11B-502.8
- ☐ The additional sign shall not be less than 17 inches wide by 22 inches high. 11B-502.8
- ☐ The additional sign shall clearly state in letters with a minimum height of 1 inch the following:
- ☐ "Unauthorized vehicles parked in designated accessible spaces not displaying distinguishing placards or special license plates issued for persons with disabilities will be towed away at the owner's expense. Towed vehicles may be reclaimed at: _____or by telephoning _____
- ☐ Blank spaces shall be filled in with appropriate information as a permanent part of the sign. 11B-502.8